PERGAMON

International Journal of Solids and Structures 40 (2003) 3827–3851

INTERNATIONAL JOURNAL OF SOLIDS and STRUCTURES

www.elsevier.com/locate/ijsolstr

Circular inclusions in anti-plane strain couple stress elasticity

V.A. Lubarda *

Department of Mechanical and Aerospace Engineering, University of California, 9500 Gilman drive MAE, San Diego, La Jolla, CA 92093-0411, USA

Received 14 April 2003; received in revised form 14 April 2003

Abstract

The solution for a circular inclusion with a prescribed anti-plane eigenstrain is derived. It is shown that the components of the Eshelby tensor within the inclusion, corresponding to a uniform eigenstrain, can be either uniform or non-uniform, depending on the imposed interface conditions. The stress amplification factors due to circular void or rigid inclusion in an infinite medium under remote anti-plane shear stress are calculated. The failure of the couple stress elasticity to reproduce the classical elasticity solution in the limit of vanishingly small characteristic length is indicated for a particular type of boundary conditions. The solution for a circular inhomogeneity in an infinitely extended matrix subjected to remote shear stress is then derived. The effects of the imposed interface conditions, the shear stress and couple stress discontinuities, and the relationship between the inhomogeneity and its equivalent eigenstrain inclusion problem are discussed.

Keywords: Couple stress elasticity; Anti-plane strain; Eigenstrain; Inclusions; Inhomogeneities; Interface conditions

1. Introduction

As discussed in the preceding paper (Lubarda, 2003a), the motivation to extend the classical to couple stress and micropolar theory of deformable bodies was to enable the prediction of the size effect experimentally observed in problems with a geometric length scale comparable to material's microstructural length. For example, the apparent strength of some materials with stress concentrators is higher for smaller grain size. The bending and torsional strengths are also higher for very thin beams and wires. The papers by Mindlin (1963), Kaloni and Ariman (1967), Cowin (1970a), Reddy and Venkatasubramanian (1978), Majumdar (1982), Kishida et al. (1990), Anthoine (2000) and Chen and Wang (2001, 2002) offer illustrative examples. The classical theory was also in disagreement with experiments for high-frequency ultra-short wave propagation problems, if the wavelength becomes comparable to the material's microstructural length (Mindlin, 1963; Brulin and Hsieh, 1982; Eringen, 1999). In the presence of couple stresses, shear waves

* Tel.: +1-858-534-3169; fax: +1-858-534-5698.
E-mail address: vlubarda@ucsd.edu (V.A. Lubarda).

0020-7683/03/$ - see front matter
doi:10.1016/S0020-7683(03)00227-0

propagate dispersively (with a frequency dependent wave speed). Couple stresses are also expected to affect the singular nature of the crack tip fields (Muki and Sternberg, 1965). An extensive list of references to micropolar and couple stress elasticity is available in review articles by Dhaliwal and Singh (1987) and Jasiuk and Ostoja-Starzewski (1995). The research in couple stress and related non-local and strain-gradient theories of elastic and inelastic material response has recently intensified, due to an increasing interest to describe the deformation mechanisms and manufacturing of micro- and nanostructured materials and devices, as well as inelastic localization and instability phenomena (Smyshlyaev and Fleck, 1996; Fleck and Hutchinson, 1997; De Borst and Van der Giessen, 1998; Valiev et al., 2000). An analysis of the nucleation and propagation of thermoelastic phase transformations within the couple stress theory has been recently presented by Pettinger and Abeyaratne (2000), while Yavari et al. (2002) studied the effects of the fracture surface fractality on the order of stress and couple stress singularities in micropolar elastic solids.

The objective of this paper is an analysis of the anti-plane strain problems of circular inclusions and inhomogeneities within the framework of couple stress elasticity. There has been a significant amount of research already devoted to inclusions and related problems in couple stress and micropolar elasticity. Mindlin and Tiersten (1962) and Mindlin (1963) evaluated the influence of couple stress on stress concentration around the spherical and circular voids. The corresponding problem within the framework of micropolar elasticity was addressed by Kaloni and Ariman (1967), who obtained significantly smaller stress concentration factors by removing the rotation constraint of the couple stress theory. Some of the conclusions were critically reexamined by Cowin (1970a) (see also Neuber (1966)). The effect of couple stress on stress concentration around an elliptical hole was studied by Majumdar (1982). The plane-strain calculations of stress magnification around a rigid circular inclusion were performed by Banks and Sokolowski (1968), and around a circular inhomogeneity by Hartranft and Sih (1965), Weitsman (1965) and Gupta (1976). A spherical inhomogeneity was considered by Wang (1970). Hsieh (1982) presented a general analysis of non-local micropolar volume defects. Cheng and He (1995, 1997) derived the components of the non-uniform Eshelby tensor for spherical and circular inclusions in micropolar elasticity, associated with prescribed uniform eigenstrain and eigencurvature tensors.

In this paper, we apply the couple stress theory to anti-plane strain inclusion and inhomogeneity problems. The governing equations of three-dimensional couple stress elasticity are summarized in Section 2, and then specialized to anti-plane strain conditions in Section 3. The equations are cast with respect to both Cartesian and polar coordinates. The anti-plane shearing of a circular annulus bonded to a rigid cylinder is presented in Section 4. The problem of a circular inclusion with uniform eigenstrain is studied in Section 5. It is shown that the components of the Eshelby tensor in the inclusion can be either uniform or non-uniform, depending on the type of interface condition prescribed at the boundary of the inclusion. The effects of the couple stress moduli on the values of the Eshelby tensor components are determined in each case. The solution for a circular inclusion with a particular type of the polynomial eigenstrain is also given. The stress magnification factors due to the void in an infinite matrix under remote anti-plane shear stress is derived in Section 6, and due to rigid circular inclusion in Section 7. Three types of the boundary conditions at the interface between the rigid inclusion and the surrounding matrix are considered. It is shown that the solution obtained by requiring both the zero displacement and zero displacement slope at the interface can only be achieved within the framework of couple stress elasticity. This solution does not reduce to proper classical elasticity solution in the limit of vanishingly small characteristic length, because the displacement slope at the bonded interface does not vanish in classical elasticity. The results presented in Section 8 generalize the results from previous two sections. A circular inhomogeneity is embedded in an infinitely extended matrix loaded by a remote anti-plane shear stress. Four types of the interface conditions are introduced, with a detailed calculation given for the interface that cannot transmit a particular component of the couple stress. The effects of different material properties on the stress amplification are examined. The shear stress and couple stress discontinuities, and the relationship between the inhomogeneity and its equivalent eigenstrain inclusion problem are then discussed. The concluding remarks are given in Section 9.

2. Governing equations of couple stress elasticity

The rotation vector in couple stress theory is not independent of the displacement vector u_i, but subject to the constraint

$$\varphi_i = \tfrac{1}{2} e_{ijk}\omega_{jk}, \tag{1}$$

as in classical continuum mechanics. The skew-symmetric alternating tensor is e_{ijk}, and ω_{ij} are the rectangular components of the infinitesimal rotation tensor. The surface forces are in equilibrium with the non-symmetric Cauchy stress t_{ij}, and the surface couples are in equilibrium with the non-symmetric couple stress m_{ij}, such that $T_i = n_j t_{ji}$, and $M_i = n_j m_{ji}$, where n_j are the components of the unit vector orthogonal to the surface element under consideration. In the absence of body forces and body couples, the differential equations of equilibrium are

$$t_{ji,j} = 0, \quad m_{ji,j} + e_{ijk} t_{jk} = 0. \tag{2}$$

By decomposing the stress tensor into its symmetric and antisymmetric part ($t_{ij} = \sigma_{ij} + \tau_{ij}$), from the moment equilibrium equation it readily follows that the antisymmetric part can be determined from the gradient of the couple stress tensor as

$$\tau_{ij} = -\tfrac{1}{2} e_{ijk} m_{lk,l}. \tag{3}$$

If the gradient of the couple stress vanishes at some point, the stress tensor is symmetric at that point. Note that the normal stress in the plane orthogonal to the direction **n** is $t_n = \sigma_n = \sigma_{ij} n_i n_j$, because $\tau_{ij} n_i n_j = 0$ in view of the symmetry of $n_i n_j$. Thus, the principal stresses of the symmetric tensor σ_{ij} are also the principal stresses of the non-symmetric tensor t_{ij}, although there are shear stresses in the principal planes of t_{ij} due to shear stresses τ_{ij} (Lubarda, submitted for publication).

The non-symmetric curvature tensor is the rotation gradient $\kappa_{ij} = \varphi_{j,i}$. The compatibility equations for the curvature and strain tensors are $\kappa_{ij} = -e_{jkl}\epsilon_{ik,l}$. Since ϵ_{ij} is symmetric and e_{ijk} is skew-symmetric, the curvature tensor in the couple stress theory is a deviatoric tensor, $\kappa_{kk} = 0$. In addition, there is an identity $\kappa_{ij,k} = \kappa_{kj,i}$, which defines the compatibility equations for curvature components. The compatibility equations for strain components are the usual Saint–Venant's compatibility equations.

Assuming that the elastic strain energy is a function of the strain and curvature tensors, $W = W(\epsilon_{ij}, \kappa_{ij})$, the constitutive relations of couple stress elasticity are

$$\sigma_{ij} = \frac{\partial W}{\partial \epsilon_{ij}}, \quad m_{ij} = \frac{\partial W}{\partial \kappa_{ij}}. \tag{4}$$

In the case of material linearity, the strain energy is a quadratic function of the strain and curvature components

$$W = \tfrac{1}{2} C_{ijkl}\epsilon_{ij}\epsilon_{kl} + \tfrac{1}{2} K_{ijkl}\kappa_{ij}\kappa_{kl}. \tag{5}$$

The fourth-order tensors of elastic moduli are C_{ijkl} and K_{ijkl}. Since the curvature tensor is not symmetric, only reciprocal symmetry holds for the couple stress moduli $K_{ijkl} = K_{klij}$. The moduli C_{ijkl} are fully symmetric. The stresses associated with Eq. (5) are

$$\sigma_{ij} = C_{ijkl}\epsilon_{kl}, \quad m_{ij} = K_{ijkl}\kappa_{kl}. \tag{6}$$

The antisymmetric part of stress (τ_{ij}) is indeterminate by the constitutive analysis, but is specified in terms of the couple stress gradient by Eq. (3). In the case of isotropic material, we have

$$C_{ijkl} = \mu(\delta_{ik}\delta_{jl} + \delta_{il}\delta_{jk}) + \lambda\delta_{ij}\delta_{kl}, \quad K_{ijkl} = 4\alpha\delta_{ik}\delta_{jl} + 4\beta\delta_{il}\delta_{jk}, \tag{7}$$

where μ, λ, α, and β are the Lamé-type constants of isotropic couple stress elasticity. The stress tensors are in this case

$$\sigma_{ij} = 2\mu\epsilon_{ij} + \lambda\epsilon_{kk}\delta_{ij}, \quad m_{ij} = 4\alpha\kappa_{ij} + 4\beta\kappa_{ji}. \tag{8}$$

A spherical part of the couple stress m_{ij} does not appear in any of the basic field equations of couple stress theory, and without loss of physical generality it may be assumed to vanish (Koiter, 1964). Determination of the couple stress moduli and characteristic lengths for different materials was studied, among others, by Gauthier and Jahsman (1975), Yang and Lakes (1982), Lakes (1982, 1995), and Bouyge et al. (2001). Additional references can be found in Eringen (1999).

At any point of a smooth boundary we can specify three reduced stress tractions

$$\overline{T}_i = n_j t_{ji} - \tfrac{1}{2} e_{ijk} n_j (n_p m_{pq} n_q)_{,k}, \tag{9}$$

and two tangential couple stress tractions (e.g., Mindlin and Tiersten, 1962; Koiter, 1964)

$$\overline{M}_i = n_j m_{ji} - (n_j m_{jk} n_k) n_i. \tag{10}$$

The conservation integrals of couple stress and micropolar elasticity were studied by Lubarda and Markenscoff (1999a,b, 2000, 2003).

2.1. Displacement equations of equilibrium

The antisymmetric part of the stress tensor can be expressed as

$$\tau_{ij} = -2\alpha\omega_{ij,kk} = -2\alpha\nabla^2\omega_{ij}, \tag{11}$$

which is independent of β. The Laplacian operator is $\nabla^2 = \partial^2/\partial x_k \partial x_k$. Consequently, by adding (8) and (11) the total stress tensor is

$$t_{ij} = 2\mu\epsilon_{ij} + \lambda\epsilon_{kk}\delta_{ij} - 2\alpha\nabla^2\omega_{ij}. \tag{12}$$

Thus, the total (asymmetric) stress depends on both strain (ϵ_{ij}) and rotation (ω_{ij}), i.e., symmetric and asymmetric parts of the displacement gradient (the couple stress elasticity also being referred to as asymmetric elasticity; e.g., Grioli, 1960; Nowacki, 1986). Incorporating this into the force equilibrium equation (2), we obtain the equilibrium equations in terms of displacement components

$$\nabla^2 u_i - l^2\nabla^4 u_i + \frac{1}{1-2\nu}\frac{\partial}{\partial x_i}(\nabla\cdot\mathbf{u}) = 0, \tag{13}$$

where ν is the Poisson coefficient, and

$$l^2 = \frac{\alpha}{\mu}. \tag{14}$$

Three components of displacement and only two tangential components of rotation may be specified on the boundary.

3. Governing equations for anti-plane strain

For the anti-plane strain problems, the displacements are

$$u_1 = u_2 = 0, \quad u_3 = w(x_1, x_2). \tag{15}$$

The non-vanishing strain, rotation, and curvature components are

$$\epsilon_{13} = \epsilon_{31} = \frac{1}{2}\frac{\partial w}{\partial x_1}, \quad \epsilon_{23} = \epsilon_{32} = \frac{1}{2}\frac{\partial w}{\partial x_2}, \tag{16}$$

$$\varphi_1 = \omega_{23} = \frac{1}{2}\frac{\partial w}{\partial x_2}, \quad \varphi_2 = \omega_{31} = -\frac{1}{2}\frac{\partial w}{\partial x_1}, \tag{17}$$

$$\kappa_{11} = -\kappa_{22} = \frac{1}{2}\frac{\partial^2 w}{\partial x_1 \partial x_2}, \quad \kappa_{12} = -\frac{1}{2}\frac{\partial^2 w}{\partial x_1^2}, \quad \kappa_{21} = \frac{1}{2}\frac{\partial^2 w}{\partial x_2^2}. \tag{18}$$

It readily follows that

$$\nabla^2\omega_{13} = \frac{1}{2}\frac{\partial}{\partial x_1}(\nabla^2 w), \quad \nabla^2\omega_{23} = \frac{1}{2}\frac{\partial}{\partial x_2}(\nabla^2 w), \tag{19}$$

so that from Eq. (11)

$$\tau_{31} = -\tau_{13} = \alpha\frac{\partial}{\partial x_1}(\nabla^2 w), \quad \tau_{32} = -\tau_{23} = \alpha\frac{\partial}{\partial x_2}(\nabla^2 w). \tag{20}$$

Consequently, from Eq. (12),

$$t_{13} = \mu\frac{\partial}{\partial x_1}(w - l^2\nabla^2 w), \quad t_{31} = \mu\frac{\partial}{\partial x_1}(w + l^2\nabla^2 w), \tag{21}$$

$$t_{23} = \mu\frac{\partial}{\partial x_2}(w - l^2\nabla^2 w), \quad t_{32} = \mu\frac{\partial}{\partial x_2}(w + l^2\nabla^2 w). \tag{22}$$

The couple stresses are related to the curvature components by

$$m_{11} = 4(\alpha+\beta)\kappa_{11} = 2(\alpha+\beta)\frac{\partial^2 w}{\partial x_1 \partial x_2}, \tag{23}$$

$$m_{22} = 4(\alpha+\beta)\kappa_{22} = -2(\alpha+\beta)\frac{\partial^2 w}{\partial x_1 \partial x_2} = -m_{11}, \tag{24}$$

$$m_{12} = 4\alpha\kappa_{12} + 4\beta\kappa_{21} = -2\alpha\frac{\partial^2 w}{\partial x_1^2} + 2\beta\frac{\partial^2 w}{\partial x_2^2}, \tag{25}$$

$$m_{21} = 4\alpha\kappa_{21} + 4\beta\kappa_{12} = 2\alpha\frac{\partial^2 w}{\partial x_2^2} - 2\beta\frac{\partial^2 w}{\partial x_1^2}. \tag{26}$$

It is noted that

$$m_{12} - m_{21} = 2(\beta - \alpha)\nabla^2 w. \tag{27}$$

Since displacement field is isochoric ($\nabla \cdot \mathbf{u} = 0$), the displacement equations of equilibrium (13) reduce to a single equation

$$\nabla^2 w - l^2\nabla^4 w = 0. \tag{28}$$

The general solution can be expressed as

$$w = w^0 + w^*, \tag{29}$$

where w^0 and w^* are the solutions of the partial differential equations

$$\nabla^2 w^0 = 0, \tag{30}$$

$$w^* - l^2\nabla^2 w^* = 0. \tag{31}$$

In view of Eqs. (29)–(31), the following identities hold

$$\nabla^2 w = \frac{1}{l^2} w^*, \tag{32}$$

and

$$w - l^2\nabla^2 w = w^0, \quad w + l^2\nabla^2 w = w^0 + 2w^*, \tag{33}$$

which can be conveniently used to simplify the stress expressions (21) and (22). For the description of the governing equations for anti-plane strain in more general micropolar elasticity, see Nowacki (1970) and Eringen (1999).

3.1. Expressions in polar coordinates

When expressed in terms of polar coordinates, the general solutions of Eqs. (30) and (31), obtained by separation of variables, are

$$w^0 = (A_0 + B_0 \ln r)(C_0 + \theta) + \sum_{n=1}^{\infty}(A_n r^n + B_n r^{-n})(C_n \cos n\theta + \sin n\theta), \tag{34}$$

$$w^* = \left[A_0^* I_0\left(\frac{r}{l}\right) + B_0^* K_0\left(\frac{r}{l}\right)\right](C_0^* + \theta) + \sum_{n=1}^{\infty}\left[A_n^* I_n\left(\frac{r}{l}\right) + B_n^* K_n\left(\frac{r}{l}\right)\right](C_n^* \cos n\theta + \sin n\theta). \tag{35}$$

The functions $I_n(\rho)$ and $K_n(\rho)$ (with $\rho = r/l$) in Eq. (35) are the modified Bessel functions of the first and second kind (of the order n); Watson (1995).

The non-zero strain, rotation and curvature components in polar coordinates are

$$\epsilon_{\theta 3} = \epsilon_{3\theta} = \frac{1}{2r}\frac{\partial w}{\partial \theta}, \quad \epsilon_{r3} = \epsilon_{3r} = \frac{1}{2}\frac{\partial w}{\partial r}, \tag{36}$$

$$\varphi_r = \omega_{\theta 3} = \frac{1}{2r}\frac{\partial w}{\partial \theta}, \quad \varphi_\theta = \omega_{3r} = -\frac{1}{2}\frac{\partial w}{\partial r}, \tag{37}$$

and

$$\kappa_{rr} = \frac{\partial \varphi_r}{\partial r} = \frac{1}{2}\frac{\partial}{\partial r}\left(\frac{1}{r}\frac{\partial w}{\partial \theta}\right), \quad \kappa_{r\theta} = \frac{\partial \varphi_\theta}{\partial r} = -\frac{1}{2}\frac{\partial^2 w}{\partial r^2}, \tag{38}$$

$$\kappa_{\theta r} = \frac{1}{r}\frac{\partial \varphi_r}{\partial \theta} - \frac{\varphi_\theta}{r} = \frac{1}{2r^2}\frac{\partial^2 w}{\partial \theta^2} + \frac{1}{2r}\frac{\partial w}{\partial r}, \tag{39}$$

$$\kappa_{\theta\theta} = \frac{1}{r}\frac{\partial \varphi_\theta}{\partial \theta} + \frac{\varphi_r}{r} = -\frac{1}{2}\frac{\partial}{\partial r}\left(\frac{1}{r}\frac{\partial w}{\partial \theta}\right) = -\kappa_{rr}. \tag{40}$$

Note that

$$\kappa_{r\theta} - \kappa_{\theta r} = \kappa_{12} - \kappa_{21} = -\tfrac{1}{2}\nabla^2 w. \tag{41}$$

The corresponding couple stress components are (Fig. 1)

$$m_{rr} = -m_{\theta\theta} = 2(\alpha + \beta)\frac{\partial}{\partial r}\left(\frac{1}{r}\frac{\partial w}{\partial \theta}\right), \tag{42}$$

$$m_{r\theta} = -2(\alpha + \beta)\frac{\partial^2 w}{\partial r^2} + 2\beta\nabla^2 w, \quad m_{\theta r} = -2(\alpha + \beta)\frac{\partial^2 w}{\partial r^2} + 2\alpha\nabla^2 w. \tag{43}$$

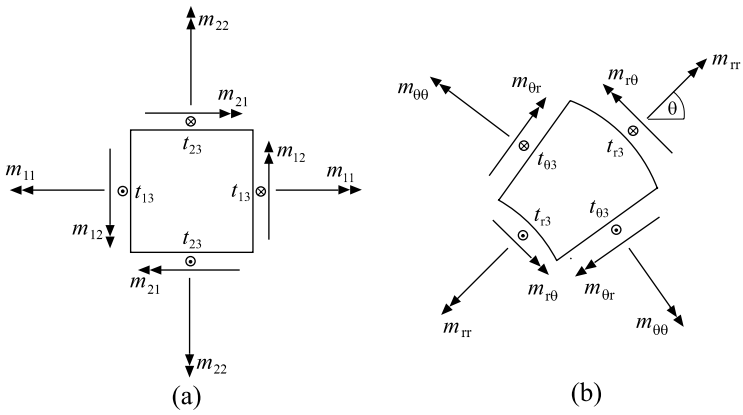

Fig. 1. (a) A material element with sides parallel to coordinates directions x_1 and x_2 under conditions of anti-plane strain; and (b) the corresponding element with sides parallel to polar directions r and θ.

The shear stresses are

$$t_{r3} = \mu \frac{\partial}{\partial r}(w - l^2\nabla^2 w), \quad t_{\theta 3} = \mu \frac{1}{r}\frac{\partial}{\partial \theta}(w - l^2\nabla^2 w), \tag{44}$$

$$t_{3r} = \mu \frac{\partial}{\partial r}(w + l^2\nabla^2 w), \quad t_{3\theta} = \mu \frac{1}{r}\frac{\partial}{\partial \theta}(w + l^2\nabla^2 w). \tag{45}$$

In view of Eq. (33), the stress components t_{r3} and $t_{\theta 3}$ (or t_{13} and t_{23}) do not depend explicitly on w^*, i.e.,

$$t_{r3} = \mu \frac{\partial w^0}{\partial r}, \quad t_{\theta 3} = \mu \frac{1}{r}\frac{\partial w^0}{\partial \theta}, \tag{46}$$

$$t_{3r} = t_{r3} + 2\mu \frac{\partial w^*}{\partial r}, \quad t_{3\theta} = t_{\theta 3} + 2\mu \frac{1}{r}\frac{\partial w^*}{\partial \theta}. \tag{47}$$

The couple stresses, however, affect the values of t_{r3} and $t_{\theta 3}$ through the imposed boundary conditions. For example, along an unstressed circular boundary $r = R$ around the origin, the reduced tractions must vanish,

$$\bar{t}_{r3} = t_{r3} - \frac{1}{2R}\frac{\partial m_{rr}}{\partial \theta} = 0, \quad m_{r\theta} = 0. \tag{48}$$

Also note that

$$m_{r\theta} = -2(\alpha + \beta)\frac{\partial^2 w}{\partial r^2} + \frac{2\beta}{l^2} w^*, \quad m_{\theta r} = -2(\alpha + \beta)\frac{\partial^2 w}{\partial r^2} + \frac{2\alpha}{l^2} w^*. \tag{49}$$

4. Anti-plane shear of circular annulus

A simple but illustrative problem of couple stress elasticity is the anti-plane shearing of a circular annulus. Suppose that the inner surface $r = R$ is fixed, while the constant shearing stress σ^0_{r3} is applied on the outer surface $r = R_0$ (Fig. 2). The corresponding displacement field is independent of θ and given by

$$w(r) = R_0\left[A \ln\frac{r}{R} + B + CI_0\left(\frac{r}{l}\right) + DK_0\left(\frac{r}{l}\right)\right]. \tag{50}$$

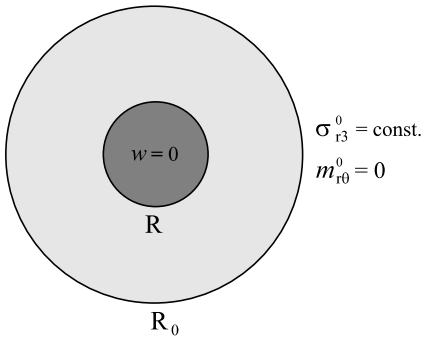

Fig. 2. A circular annulus of inner radius R and outer radius R_0 under shear stress σ^0_{r3} over the outer surface. The inner surface of the cylinder is fixed ($w = 0$).

The integration constants are specified from the boundary conditions

$$w(R) = 0, \quad t_{r3}(R_0) = \sigma^0_{r3}, \quad m_{r\theta}(R_0) = 0. \tag{51}$$

The fourth boundary condition is obtained by specifying an additional information about the bonded interface, such as the magnitude of slope $\mathrm{d}w/\mathrm{d}r$ or the couple stress $m_{r\theta}$ at $r = R$. We will proceed by adopting the first choice, i.e., by assuming that the rotation

$$\varphi_\theta(R) = -\frac{1}{2}\left(\frac{\mathrm{d}w}{\mathrm{d}r}\right)_{r=R} = \hat{\varphi}_\theta \tag{52}$$

is known at the interface. It readily follows from Eqs. (46) to (49) that

$$A = \frac{\sigma^0_{r3}}{\mu}, \quad B = -CI_0\left(\frac{R}{l}\right) - DK_0\left(\frac{R}{l}\right), \tag{53}$$

and

$$C = \frac{l}{R_0}\frac{\left[K_1\left(\frac{R}{l}\right) - b\frac{R_0}{R}\right]\frac{\sigma^0_{r3}}{\mu} - 2b\hat{\varphi}\theta}{bI_1\left(\frac{R}{l}\right) + aK_1\left(\frac{R}{l}\right)}, \tag{54}$$

$$D = \frac{l}{R_0}\frac{\left[I_1\left(\frac{R}{l}\right) + a\frac{R_0}{R}\right]\frac{\sigma^0_{r3}}{\mu} + 2a\hat{\varphi}_\theta}{bI_1\left(\frac{R}{l}\right) + aK_1\left(\frac{R}{l}\right)}, \tag{55}$$

where

$$a = \frac{\alpha}{\alpha+\beta}\frac{R_0}{l}I_0\left(\frac{R_0}{l}\right) - I_1\left(\frac{R_0}{l}\right), \quad b = \frac{\alpha}{\alpha+\beta}\frac{R_0}{l}K_0\left(\frac{R_0}{l}\right) + K_1\left(\frac{R_0}{l}\right). \tag{56}$$

Consequently,

$$t_{r3}(r) = \frac{R_0}{r}\sigma^0_{r3}, \tag{57}$$

$$t_{3r}(r) = \frac{R_0}{r}\left\{\sigma^0_{r3} + 2\mu\frac{r}{l}\left[CI_1\left(\frac{r}{l}\right) - DK_1\left(\frac{r}{l}\right)\right]\right\}, \tag{58}$$

$$m_{r\theta}(r) = 2(\alpha+\beta)\left\{\frac{R_0}{r^2}\frac{\sigma^0_{r3}}{\mu} - C\frac{R_0}{l^2}\left[\frac{\alpha}{\alpha+\beta}I_0\left(\frac{r}{l}\right) - \frac{l}{r}I_1\left(\frac{r}{l}\right)\right] - D\frac{R_0}{l^2}\left[\frac{\alpha}{\alpha+\beta}K_0\left(\frac{r}{l}\right) + \frac{l}{r}K_1\left(\frac{r}{l}\right)\right]\right\}, \tag{59}$$

$$m_{r\theta}(r) = 2(\alpha+\beta)\left\{\frac{R_0}{r^2}\frac{\sigma_{r3}^0}{\mu} - C\frac{R_0}{l^2}\left[\frac{\beta}{\alpha+\beta}I_0\left(\frac{r}{l}\right) - \frac{l}{r}I_1\left(\frac{r}{l}\right)\right] - D\frac{R_0}{l^2}\left[\frac{\beta}{\alpha+\beta}K_0\left(\frac{r}{l}\right) + \frac{l}{r}K_1\left(\frac{r}{l}\right)\right]\right\}. \tag{60}$$

If the bonded interface cannot support the couple stress $m_{r\theta}$, we set the right-hand side of Eq. (59) equal to zero and calculate the corresponding rotation $\hat{\varphi}_\theta$.

5. Circular inclusion with uniform eigenstrain

Suppose that a circular cylinder (inclusion) of radius R is taken out of an infinitely extended medium (matrix) and given a uniform stress-free transformation (eigenstrain) of anti-plane shear type. The corresponding displacement is a linear function of the rectangular coordinates, such that

$$w_{\text{in}}^{\bullet} = 2r(\epsilon_{13}^{\bullet}\cos\theta + \epsilon_{23}^{\bullet}\sin\theta), \tag{61}$$

where $\epsilon_{13}^{\bullet}$ and $\epsilon_{23}^{\bullet}$ are the constant eigenstrain components. When the cylinder is inserted back into the matrix, with their interface perfectly bonded, the displacement fields inside and outside the inclusion are, respectively,

$$w_{\text{in}} = w_{\text{in}}^0 + w_{\text{in}}^* = r(A_1\cos\theta + B_1\sin\theta) + RI_1\left(\frac{r}{l}\right)(C_1\cos\theta + D_1\sin\theta), \tag{62}$$

$$w_{\text{out}} = w_{\text{out}}^0 + w_{\text{out}}^* = \frac{R^2}{r}(A_2\cos\theta + B_2\sin\theta) + RK_1\left(\frac{r}{l}\right)(C_2\cos\theta + D_2\sin\theta). \tag{63}$$

The functions w_{in}^0 and w_{out}^0 satisfy the Laplacian equation, while w_{in}^* and w_{out}^* satisfy the equation $l^2\nabla^2 w^* = w^*$. The boundary conditions at the bonded interface are

$$w_{\text{in}} = w_{\text{out}}, \quad \bar{t}_{r3}^{\text{in}} = \bar{t}_{r3}^{\text{out}}, \quad m_{r\theta}^{\text{in}} = m_{r\theta}^{\text{out}} \quad \text{at } r = R. \tag{64}$$

The reduced tractions at the interface are defined by

$$\bar{t}_{r3}^{\text{in}} = t_{r3}^{\text{in}} - \frac{1}{2R}\frac{\partial m_{rr}^{\text{in}}}{\partial\theta}, \quad \bar{t}_{r3}^{\text{out}} = t_{r3}^{\text{out}} - \frac{1}{2R}\frac{\partial m_{rr}^{\text{out}}}{\partial\theta}. \tag{65}$$

The conditions (64) are not sufficient to specify all constants appearing in Eqs. (62) and (63). An additional condition is needed, which can be selected in several ways. An appealing condition is obtained by requiring that the shear stress t_{3r} is continuous across the interface, i.e.,

$$t_{3r}^{\text{in}} = t_{3r}^{\text{out}} \quad \text{at } r = R. \tag{66}$$

In classical non-polar elasticity, this condition is automatically satisfied by the imposed interface condition $t_{r3}^{\text{in}} = t_{r3}^{\text{out}}$, since the stress tensor in non-polar elasticity is a symmetric tensor. Another possibility to specify the additional interface condition is to stipulate the relationship between the rotation components φ_θ across the interface. For example, in classical elasticity a posteriori calculations reveal that $\varphi_\theta^{\text{in}} = -\varphi_\theta^{\text{out}}$ at $r = R$. While one may assume that the same relationship holds in couple stress elasticity, it is likely that this relationship will be altered to some extent by the presence of the couple stress $m_{r\theta}$ at the interface. The precise relationship is therefore not known in advance. Of course, if one assumes that the interface cannot transmit the couple stress $m_{r\theta}$ during the insertion of the inclusion into the matrix material, the additional interface condition would be simply $m_{r\theta} = 0$ at $r = R$. Actually, one may show that various possibilities can all be deduced by the specification of the appropriate (corresponding) value of the couple stress $m_{r\theta}$ at the interface. We shall proceed with further calculations by adopting the condition (66). The condition $m_{r\theta}(R,\theta) = 0$ will be considered within Section 8.1.

To apply the boundary (interface) conditions (64) and (66), we first derive the general expressions for the shear and couple stress components. It readily follows that

$$t_{r3}^{\text{in}} = \mu \frac{\partial}{\partial r}(w_{\text{in}}^{0} - w_{\text{in}}^{\bullet}) = \mu(A_1 - 2\epsilon_{13}^{\bullet})\cos\theta + \mu(B_1 - 2\epsilon_{23}^{\bullet})\sin\theta, \tag{67}$$

$$t_{r3}^{\text{out}} = \mu \frac{\partial w_{\text{out}}^{0}}{\partial r} = -\mu \frac{R^2}{r^2}(A_2\cos\theta + B_2\sin\theta), \tag{68}$$

$$\begin{aligned} t_{3r}^{\text{in}} &= t_{r3}^{\text{in}} + 2\mu \frac{\partial w_{\text{in}}^{*}}{\partial r} \\ &= \mu\left\{A_1 - 2\epsilon_{13}^{\bullet} + 2\frac{R}{r}\left[I_1\left(\frac{r}{l}\right) + \frac{r}{l}I_2\left(\frac{r}{l}\right)\right]C_1\right\}\cos\theta + \mu\left\{B_1 - 2\epsilon_{23}^{\bullet} + 2\frac{R}{r}\left[I_1\left(\frac{r}{l}\right) + \frac{r}{l}I_2\left(\frac{r}{l}\right)\right]D_1\right\}\sin\theta, \end{aligned} \tag{69}$$

$$\begin{aligned} t_{3r}^{\text{out}} &= t_{r3}^{\text{out}} + 2\mu \frac{\partial w_{\text{out}}^{*}}{\partial r} \\ &= -\mu\left\{\frac{R^2}{r^2}A_2 - 2\frac{R}{r}\left[K_1\left(\frac{r}{l}\right) - \frac{r}{l}K_2\left(\frac{r}{l}\right)\right]C_2\right\}\cos\theta - \mu\left\{\frac{R^2}{r^2}B_2 - 2\frac{R}{r}\left[K_1\left(\frac{r}{l}\right) - \frac{r}{l}K_2\left(\frac{r}{l}\right)\right]D_2\right\}\sin\theta, \end{aligned} \tag{70}$$

$$m_{rr}^{\text{in}} = 2(\alpha+\beta)\frac{\partial}{\partial r}\left(\frac{1}{r}\frac{\partial w_{\text{in}}}{\partial \theta}\right) = -2(\alpha+\beta)\frac{R}{rl}I_2\left(\frac{r}{l}\right)(C_1\sin\theta - D_1\cos\theta), \tag{71}$$

$$\begin{aligned} m_{rr}^{\text{out}} &= 2(\alpha+\beta)\frac{\partial}{\partial r}\left(\frac{1}{r}\frac{\partial w_{\text{out}}}{\partial \theta}\right) \\ &= 2(\alpha+\beta)\frac{R}{r^2}\left[2\frac{R}{r}A_2 + \frac{r}{l}K_2\left(\frac{r}{l}\right)C_2\right]\sin\theta - 2(\alpha+\beta)\frac{R}{r^2}\left[2\frac{R}{r}B_2 + \frac{r}{l}K_2\left(\frac{r}{l}\right)D_2\right]\cos\theta, \end{aligned} \tag{72}$$

$$m_{r\theta}^{\text{in}} = -2(\alpha+\beta)\frac{\partial^2 w_{\text{in}}}{\partial r^2} + \frac{2\beta}{l^2}w_{\text{in}}^{*} = 2\mu R\left[\frac{\alpha+\beta}{\alpha}\frac{l}{r}I_2\left(\frac{r}{l}\right) - I_1\left(\frac{r}{l}\right)\right](C_1\cos\theta + D_1\sin\theta), \tag{73}$$

$$\begin{aligned} m_{r\theta}^{\text{out}} &= -2(\alpha+\beta)\frac{\partial^2 w_{\text{out}}}{\partial r^2} + \frac{2\beta}{l^2}w_{\text{out}}^{*} \\ &= -2\mu R\left\{2\frac{\alpha+\beta}{\alpha}\frac{Rl^2}{r^3}A_2 + \left[K_1\left(\frac{r}{l}\right) + \frac{\alpha+\beta}{\alpha}\frac{l}{r}K_2\left(\frac{r}{l}\right)\right]C_2\right\}\cos\theta \\ &\quad - 2\mu R\left\{2\frac{\alpha+\beta}{\alpha}\frac{Rl^2}{r^3}B_2 + \left[K_1\left(\frac{r}{l}\right) + \frac{\alpha+\beta}{\alpha}\frac{l}{r}K_2\left(\frac{r}{l}\right)\right]D_2\right\}\sin\theta. \end{aligned} \tag{74}$$

The three interface conditions (64) now become

$$A_1 - A_2 + I_1C_1 - K_1C_2 = 0, \tag{75}$$

$$A_1 + \left(1 + 2\frac{\alpha+\beta}{\mu R^2}\right)A_2 + \frac{\alpha+\beta}{\mu Rl}(I_2C_1 + K_2C_2) = 2\epsilon_{13}^{\bullet}, \tag{76}$$

$$2A_2 - \frac{\mu R^2}{\alpha+\beta}(I_1C_1 - K_1C_2) + \frac{R}{l}(I_2C_1 + K_2C_2) = 0, \tag{77}$$

and

$$B_1 - B_2 + I_1D_1 - K_1D_2 = 0, \tag{78}$$

$$B_1 + \left(1 + 2\frac{\alpha+\beta}{\mu R^2}\right)B_2 - \frac{\alpha+\beta}{\mu R l}(I_2D_1 + K_2D_2) = 2\epsilon^{\bullet}_{23}, \tag{79}$$

$$2B_2 - \frac{\mu R^2}{\alpha+\beta}(I_1D_1 - K_1D_2) + \frac{R}{l}(I_2D_1 + K_2D_2) = 0. \tag{80}$$

In above equations, for brevity, the notation is used

$$I_v = I_v\left(\frac{R}{l}\right), \quad K_v = K_v\left(\frac{R}{l}\right), \quad v = 0, 1, 2. \tag{81}$$

The continuity condition (66) furthermore gives

$$A_1 + A_2 + 2\left(I_1 + \frac{R}{l}I_2\right)C_1 - 2\left(K_1 - \frac{R}{l}K_2\right)C_2 = 2\epsilon^{\bullet}_{13}, \tag{82}$$

$$B_1 + B_2 - 2\left(I_1 + \frac{R}{l}I_2\right)D_1 - 2\left(K_1 - \frac{R}{l}K_2\right)D_2 = 2\epsilon^{\bullet}_{23}. \tag{83}$$

The solution of the system of Eqs. (75)–(77) and (82) is

$$A_1 = \left(1 - \frac{4}{a}\right)\epsilon^{\bullet}_{13}, \quad A_2 = \epsilon^{\bullet}_{13}, \tag{84}$$

$$C_1 = \frac{2}{abI_0}\left(3\frac{l}{R}\frac{K_1}{K_0} + 2\right)\epsilon^{\bullet}_{13}, \quad C_2 = \frac{2}{abK_0}\left(3\frac{l}{R}\frac{I_1}{I_0} - 2\right)\epsilon^{\bullet}_{13}, \tag{85}$$

where

$$a = 1 + 2\frac{\alpha}{\alpha+\beta}\frac{R^2}{l^2}, \quad b = \frac{I_1}{I_0} + \frac{K_1}{K_0}. \tag{86}$$

Similarly, the solution of the system of Eqs. (78)–(81) and (83) is

$$B_1 = \left(1 - \frac{4}{a}\right)\epsilon^{\bullet}_{23}, \quad B_2 = \epsilon^{\bullet}_{23}, \tag{87}$$

$$D_1 = \frac{2}{abI_0}\left(3\frac{l}{R}\frac{K_1}{K_0} + 2\right)\epsilon^{\bullet}_{23}, \quad D_2 = \frac{2}{abK_0}\left(3\frac{l}{R}\frac{I_1}{I_0} - 2\right)\epsilon^{\bullet}_{23}. \tag{88}$$

The coefficient $1 - 4/a$, appearing in Eqs. (84) and (87), is

$$1 - \frac{4}{a} = \frac{2 - 3\dfrac{\alpha+\beta}{\alpha}\dfrac{l^2}{R^2}}{2 + \dfrac{\alpha+\beta}{\alpha}\dfrac{l^2}{R^2}}. \tag{89}$$

If $l/R \to 0$, the parameter $a \to \infty$, while

$$I_1\left(\frac{r}{l}\right)C_1 = I_1\left(\frac{r}{l}\right)D_1 \to 0, \quad K_1\left(\frac{r}{l}\right)C_2 = K_1\left(\frac{r}{l}\right)D_2 \to 0, \tag{90}$$

and $A_1 = A_2 = \epsilon^{\bullet}_{13}$ and $B_1 = B_2 = \epsilon^{\bullet}_{23}$, in agreement with the results from non-polar elasticity.

5.1. Components of non-uniform Eshelby's tensor

The strain components within the inserted inclusion are

$$\begin{aligned}\epsilon^{\text{in}}_{r3} &= \frac{1}{2}\frac{\partial w_{\text{in}}}{\partial r} \\ &= \frac{1}{2}\left\{A_1 + \frac{R}{l}\left[I_0\left(\frac{r}{l}\right) - \frac{l}{r}I_1\left(\frac{r}{l}\right)\right]C_1\right\}\cos\theta + \frac{1}{2}\left\{B_1 + \frac{R}{l}\left[I_0\left(\frac{r}{l}\right) - \frac{l}{r}I_1\left(\frac{r}{l}\right)\right]D_1\right\}\sin\theta,\end{aligned} \tag{91}$$

$$\epsilon^{\text{in}}_{\theta 3} = \frac{1}{2r}\frac{\partial w_{\text{in}}}{\partial \theta} = -\frac{1}{2}\left[A_1 + \frac{R}{r}I_1\left(\frac{r}{l}\right)C_1\right]\sin\theta + \frac{1}{2}\left[B_1 + \frac{R}{r}I_1\left(\frac{r}{l}\right)D_1\right]\cos\theta. \tag{92}$$

Upon substitution of the expressions (84), (85), (87), and (88) for the constants A, B, C, and D, we obtain

$$\epsilon^{\text{in}}_{r3} = 2S_{r3r3}\,\epsilon^{\bullet}_{r3}, \quad \epsilon^{\text{in}}_{\theta 3} = 2S_{\theta 3\theta 3}\,\epsilon^{\bullet}_{\theta 3}, \tag{93}$$

where S_{r3r3} and $S_{\theta 3\theta 3}$ are the components of non-uniform Eshelby's tensor (Eshelby, 1957). These are here defined by

$$S_{r3r3} = \frac{1}{4}\left\{1 - \frac{4}{a} + \frac{2}{abI_0}\left(3\frac{l}{R}\frac{K_1}{K_0} + 2\right)\frac{R}{l}\left[I_0\left(\frac{r}{l}\right) - \frac{l}{r}I_1\left(\frac{r}{l}\right)\right]\right\}, \tag{94}$$

$$S_{\theta 3\theta 3} = \frac{1}{4}\left[1 - \frac{4}{a} + \frac{2}{abI_0}\left(3\frac{l}{R}\frac{K_1}{K_0} + 2\right)\frac{R}{r}I_1\left(\frac{r}{l}\right)\right]. \tag{95}$$

It is noted that the material properties enter these expressions only through the ratios α/β and α/μ (or l). If $l/R \to 0$, the strain field within the inclusion becomes uniform, with $S_{r3r3} = S_{\theta 3\theta 3} = 1/4$ (independent of material properties). A non-uniformity of the Eshelby tensor in the case of spherical and circular inclusions in a micropolar elastic medium has been demonstrated by Cheng and He (1995, 1997). In their work the microrotations are independent of the displacement field, and the results cannot be simply reduced to our results of the constrained rotation and couple stress elasticity. Under what combination of material parameters the solution of a micropolar elasticity problem reduces to the solution of the corresponding couple stress elasticity problem was discussed by Mindlin (1963), Kaloni and Ariman (1967), Eringen (1968), Cowin (1970a,b) and Lakes (1985). The antisymmetric part of the stress tensor in micropolar elasticity (independent microrotation φ_i) is specified by the constitutive expression $\tau_{ij} = 2\bar{\mu}(\omega_{ij} - e_{ijk}\varphi_k)$, where $\bar{\mu}$ is the micropolar shear (rotational) modulus, while τ_{ij} is indeterminate by the constitutive analysis in couple stress elasticity, where $\omega_{ij} = e_{ijk}\varphi_k$ and $\overline{\mu} \to \infty$.

It should be observed, however, that the non-uniformity of strain within the inclusion is associated with the imposed condition on the continuity of traction $t_{3r}(R,\theta)$. If, instead of (66), we assume that the interface cannot support the couple stress $m_{r\theta}$, i.e.,

$$m^{\text{in}}_{r\theta}(R,\theta) = m^{\text{out}}_{r\theta}(R,\theta) = 0, \tag{96}$$

we obtain

$$A_1 = \frac{1}{c}\left(\frac{K_0}{K_1} + \frac{\alpha}{\alpha+\beta}\frac{R}{l}\right)\epsilon^{\bullet}_{13}, \quad A_2 = \epsilon^{\bullet}_{13}, \tag{97}$$

$$I_1 C_1 = 0, \quad K_1 C_2 = -\frac{2}{c}\frac{l}{R}\epsilon^{\bullet}_{13}, \tag{98}$$

where

$$c = \frac{K_0}{K_1} + 2\frac{l}{R} + \frac{\alpha}{\alpha+\beta}\frac{R}{l}. \tag{99}$$

The expressions for B_1, B_2, D_1 and D_2 are obtained from Eqs. (97) and (98) by replacing $\epsilon^{\bullet}_{13}$ with $\epsilon^{\bullet}_{23}$. The corresponding displacements are

$$w_{\text{in}} = \frac{1}{c}\left(\frac{K_0}{K_1} + \frac{\alpha}{\alpha+\beta}\frac{R}{l}\right) r\epsilon^{\bullet}_{r3}, \quad w_{\text{out}} = \left[\frac{R^2}{r} - \frac{2l}{c}\frac{1}{K_1}K_1\left(\frac{r}{l}\right)\right]\epsilon^{\bullet}_{r3}. \tag{100}$$

They depend on the material properties through the ratios α/β and α/μ (or l). The strain components within the inclusion are

$$\epsilon^{\text{in}}_{r3} = \frac{1}{2c}\left(\frac{K_0}{K_1} + \frac{\alpha}{\alpha+\beta}\frac{R}{l}\right)\epsilon^{\bullet}_{r3}, \quad \epsilon^{\text{in}}_{\theta 3} = \frac{1}{2c}\left(\frac{K_0}{K_1} + \frac{\alpha}{\alpha+\beta}\frac{R}{l}\right)\epsilon^{\bullet}_{\theta 3}, \tag{101}$$

where

$$\epsilon^{\bullet}_{r3} = \epsilon^{\bullet}_{13}\cos\theta + \epsilon^{\bullet}_{23}\sin\theta, \quad \epsilon^{\bullet}_{\theta 3} = -\epsilon^{\bullet}_{13}\sin\theta + \epsilon^{\bullet}_{23}\cos\theta. \tag{102}$$

The components of, in this case uniform, Eshelby tensor are

$$S_{r3r3} = S_{\theta 3\theta 3} = \frac{1}{4c}\left(\frac{K_0}{K_1} + \frac{\alpha}{\alpha+\beta}\frac{R}{l}\right). \tag{103}$$

5.2. Circular inclusion with a polynomial eigenstrain

We extend here the analysis to the case of a circular cylindrical inclusion that has undergone a particular type of the polynomial eigenstrain described by the displacement field

$$w^{\bullet}_{\text{in}} = \frac{r^n}{R^{n-1}}(g^{\bullet}_{13}\cos n\theta + g^{\bullet}_{23}\sin n\theta), \tag{104}$$

where $g^{\bullet}_{13}$ and $g^{\bullet}_{23}$ are the constants (for a more general polynomial eigenstrain in the case of classical elasticity, see Mura, 1987). The inside and outside displacement fields after the cylinder is inserted back into the matrix are, respectively,

$$w_{\text{in}} = \frac{r^n}{R^{n-1}}(A_1\cos n\theta + B_1\sin n\theta) + RI_n\left(\frac{r}{l}\right)(C_1\cos n\theta + D_1\sin n\theta), \tag{105}$$

$$w_{\text{out}} = \frac{R^{n+1}}{r^n}(A_2\cos n\theta + B_2\sin n\theta) + RK_n\left(\frac{r}{l}\right)(C_2\cos n\theta + D_2\sin n\theta). \tag{106}$$

The boundary conditions at the bonded interface, specified by Eqs. (64) and (66), then give

$$A_1 - A_2 + I_n C_1 - K_n C_2 = 0, \tag{107}$$

$$\left(1 + \frac{1}{n^2}\frac{\alpha}{\alpha+\beta}\frac{R^2}{l^2}\right)(A_1 + A_2) - (A_1 - A_2) + \frac{1}{n}\frac{R}{l}(I_{n+1}C_1 + K_{n+1}C_2) = \frac{1}{n^2}\frac{\alpha+\beta}{\alpha}\frac{R^2}{l^2}g^{\bullet}_{13}, \tag{108}$$

$$n(A_1 + A_2) - \left(n^2 - \frac{\alpha}{\alpha+\beta}\frac{R^2}{l^2}\right)(A_1 - A_2) + \frac{R}{l}(I_{n+1}C_1 + K_{n+1}C_2) = 0, \tag{109}$$

$$A_1 + A_2 - 2(A_1 - A_2) + \frac{2}{n}\frac{R}{l}(I_{n+1}C_1 + K_{n+1}C_2) = g_{13}^{\bullet}, \tag{110}$$

with similar expressions for the constants B and D.

The solution of the system of Eqs. (107)–(110) is

$$A_1 = \frac{g_{13}^{\bullet}}{2a}\left\{3n - \frac{\alpha}{\alpha+\beta}\left[\frac{2}{n}\frac{R^2}{l^2} + n^2(n-1)\frac{l^2}{R^2}\right]\right\}, \tag{111}$$

$$A_2 = \frac{g_{13}^{\bullet}}{2a}\left\{3n - 4 - \frac{\alpha}{\alpha+\beta}\left[\frac{2}{n}\frac{R^2}{l^2} + n^2(n-1)\frac{l^2}{R^2}\right]\right\}, \tag{112}$$

$$C_1 = -\frac{g_{13}^{\bullet}}{ab}\frac{1}{I_{n-1}}\left\{2 + \left[n + 2 - \frac{\alpha}{\alpha+\beta}n^2(n-1)\frac{l^2}{R^2}\right]\frac{l}{R}\frac{K_n}{K_{n-1}}\right\}, \tag{113}$$

$$C_2 = \frac{g_{13}^{\bullet}}{ab}\frac{1}{K_{n-1}}\left\{2 - \left[n + 2 - \frac{\alpha}{\alpha+\beta}n^2(n-1)\frac{l^2}{R^2}\right]\frac{l}{R}\frac{I_n}{I_{n-1}}\right\}, \tag{114}$$

where

$$a = n - 2 - \frac{\alpha}{\alpha+\beta}\left[\frac{2}{n}\frac{R^2}{l^2} - n^2(n-1)\frac{l^2}{R^2}\right], \quad b = \frac{I_n}{I_{n-1}} + \frac{K_n}{K_{n-1}}. \tag{115}$$

The integration constants B_1, B_2, D_1, and D_2 are obtained from Eqs. (111) to (114) by replacing $g_{13}^{\bullet}$ with $g_{23}^{\bullet}$. When $n = 1$, we recover the expressions (84)–(88) for the inclusion under uniform initial eigenstrain $g_{13}^{\bullet} = 2\epsilon_{13}^{\bullet}$ and $g_{23}^{\bullet} = 2\epsilon_{23}^{\bullet}$. Similar analysis can be performed if, instead of the continuity of traction $t_{3r}(R,\theta)$, we require that the interface cannot transmit the couple stress $m_{r\theta}(R,\theta)$.

6. Circular void in an infinite medium

Consider a stress-free circular void of radius R in an infinite medium under remote shear stresses σ_{13}^{∞} and σ_{23}^{∞}. The displacement field is $w = w^0 + w^*$, where

$$w^0 = \left(\frac{\sigma_{13}^{\infty}}{\mu}r + A\frac{R^2}{r}\right)\cos\theta + \left(\frac{\sigma_{23}^{\infty}}{\mu}r + B\frac{R^2}{r}\right)\sin\theta, \tag{116}$$

$$w^* = RK_1\left(\frac{r}{l}\right)(C\cos\theta + D\sin\theta). \tag{117}$$

The constants A, B, C, and D are determined from the boundary conditions of vanishing reduced stress tractions along the surface of the hole $r = R$, which are

$$\bar{t}_{r3} = t_{r3} - \frac{1}{2R}\frac{\partial m_{rr}}{\partial\theta} = 0, \quad m_{r\theta} = 0. \tag{118}$$

The boundary conditions giving rise to uniform shear stresses σ_{13}^{∞} and σ_{23}^{∞} at $r \to \infty$ are identically satisfied by the selected form of the displacement function. The first condition (118) gives

$$\left[\mu R^2 + 2(\alpha+\beta)\right]A + (\alpha+\beta)\left[K_1\left(\frac{R}{l}\right) - \frac{R}{l}K'\left(\frac{R}{l}\right)\right]C = R^2\sigma_{13}^{\infty}, \tag{119}$$

$$\left[\mu R^2 + 2(\alpha+\beta)\right]B + (\alpha+\beta)\left[K_1\left(\frac{R}{l}\right) - \frac{R}{l}K'\left(\frac{R}{l}\right)\right]D = R^2\sigma_{23}^{\infty}, \tag{120}$$

and the second

$$2(\alpha+\beta)A + \frac{R^2}{l^2}\left[(\alpha+\beta)K_1''\left(\frac{R}{l}\right) - \beta K_1\left(\frac{R}{l}\right)\right]C = 0, \tag{121}$$

$$2(\alpha+\beta)B + \frac{R^2}{l^2}\left[(\alpha+\beta)K_1''\left(\frac{R}{l}\right) - \beta K_1\left(\frac{R}{l}\right)\right]D = 0. \tag{122}$$

It readily follows that

$$A = \frac{a}{b}\frac{\sigma_{13}^{\infty}}{\mu}, \quad B = \frac{a}{b}\frac{\sigma_{23}^{\infty}}{\mu}, \quad C = -\frac{2}{b}\frac{\sigma_{13}^{\infty}}{\mu}, \quad D = -\frac{2}{b}\frac{\sigma_{23}^{\infty}}{\mu}, \tag{123}$$

with the parameters

$$a = a_0 + 2K_1, \quad b = a_0 + 4K_1, \quad a_0 = \frac{R}{l}K_0 + \frac{\alpha}{\alpha+\beta}\frac{R^2}{l^2}K_1. \tag{124}$$

The values of the modified Bessel functions at $r = R$ are denoted by K_0 and K_1. The resulting displacement field is

$$w = \left[r + \frac{a}{b}\frac{R^2}{r} - \frac{2R}{b}K_1\left(\frac{r}{l}\right)\right]\frac{\sigma_{r3}^{\infty}}{\mu}, \tag{125}$$

where

$$\sigma_{r3}^{\infty} = \sigma_{13}^{\infty}\cos\theta + \sigma_{23}^{\infty}\sin\theta. \tag{126}$$

In the limit as $R/l \to \infty$, the ratio $a/b \to 1$ and we recover the classical elasticity result

$$w = \left(r + \frac{R^2}{r}\right)\frac{\sigma_{r3}^{\infty}}{\mu}. \tag{127}$$

To evaluate the effect of the couple stresses on the stress concentration at the points on the surface of the hole, consider the shear stress components $t_{\theta 3}$ and $t_{3\theta}$ at $r = R$. It is found that

$$t_{\theta 3} = \frac{2c}{b}\sigma_{\theta 3}^{\infty}, \quad t_{3\theta} = \left(1 + \frac{d}{b}\right)\sigma_{\theta 3}^{\infty}, \tag{128}$$

with $c = a_0 + 3K_1$, $d = a_0 - 2K_1$ and

$$\sigma_{\theta 3}^{\infty} = -\sigma_{13}^{\infty}\sin\theta + \sigma_{23}^{\infty}\cos\theta. \tag{129}$$

The stress magnification factor for the shear stress $t_{\theta 3} = 2\zeta\sigma_{\theta 3}^{\infty}$ due to couple stress effects is

$$\zeta = \frac{c}{b} = \frac{\dfrac{\alpha}{\alpha+\beta} + \dfrac{l}{R}\left(3\dfrac{l}{R} + \dfrac{K_0}{K_1}\right)}{\dfrac{\alpha}{\alpha+\beta} + \dfrac{l}{R}\left(4\dfrac{l}{R} + \dfrac{K_0}{K_1}\right)}. \tag{130}$$

For example, for a small hole with the radius $R = 3l$ and with $\beta = 0$, this gives $\zeta = 0.936$ (indicating a decrease of the maximum stress due to couple stress effects). The stress concentration factors in the case of

the void in an infinite plate under remote tension were calculated by Mindlin (1963). The effect of couple stresses on stress concentration is less pronounced if the model of micropolar elasticity is used, where the material rotation is independent of the displacement components (Kaloni and Ariman, 1967; Cowin, 1970a; Eringen, 1999).

7. Rigid circular inclusion

In this section we consider a rigid circular inclusion of radius R within an infinitely extended medium under remote loading σ_{r3}^{∞}, defined in Eq. (126). We want to examine the stress magnification due to couple stress effects. The displacement field is

$$w = R\left[\frac{\sigma_{13}^{\infty}}{\mu}\frac{r}{R} + A\frac{R}{r} + CK_1\left(\frac{r}{l}\right)\right]\cos\theta + R\left[\frac{\sigma_{23}^{\infty}}{\mu}\frac{r}{R} + B\frac{R}{r} + DK_1\left(\frac{r}{l}\right)\right]\sin\theta. \tag{131}$$

The integration constants can be determined from the boundary conditions at the surface of the rigid inclusion

$$w(R,\theta) = 0, \quad m_{r\theta}(R,\theta) = m_{r\theta}^{0} = l(a_{12}\cos\theta - a_{21}\sin\theta), \tag{132}$$

where $la_{12} = m_{12}(R,0)$ and $la_{21} = m_{21}(R,0)$ are assumed to be given constants. While the first boundary condition at the bonded interface in (132) is obvious, the second one needs an explanation. In general, we do not know a_{12} and a_{21} in advance, but we shall be able to relate these parameters to specific types of interface. For example, if the interface cannot transmit the couple stress $m_{r\theta}^{0}$, these parameters are identically equal to zero. Other possibilities will be discussed in the sequel. In any case, it readily follows that

$$A = -K_1C - \frac{\sigma_{13}^{\infty}}{\mu}, \quad B = -K_1D - \frac{\sigma_{23}^{\infty}}{\mu}, \tag{133}$$

and

$$K_1C = \frac{1}{c}\left[\frac{2l}{R}\frac{\sigma_{13}^{\infty}}{\mu} - \frac{\alpha}{\alpha+\beta}\frac{a_{12}}{2\mu}\right], \quad K_1D = \frac{1}{c}\left[\frac{2l}{R}\frac{\sigma_{23}^{\infty}}{\mu} + \frac{\alpha}{\alpha+\beta}\frac{a_{21}}{2\mu}\right], \tag{134}$$

where

$$c = \frac{K_0}{K_1} + \frac{\alpha}{\alpha+\beta}\frac{R}{l}. \tag{135}$$

The displacement field is

$$w = \left\{r - \frac{R^2}{r} + \frac{1}{c}\left[\frac{1}{K_1}K_1\left(\frac{r}{l}\right) - \frac{R}{r}\right]\left(2l - \frac{R}{2l}\frac{\alpha}{\alpha+\beta}\frac{m_{r\theta}^{0}}{\sigma_{r3}^{\infty}}\right)\right\}\frac{\sigma_{r3}^{\infty}}{\mu}. \tag{136}$$

The corresponding stress and couple stress components in the matrix material readily follow from Eqs. (46), (47) and (49). For example, at $r = R$ we have

$$t_{r3}(R,\theta) = 2\sigma_{r3}^{\infty} + \frac{1}{c}\left(\frac{2l}{R}\sigma_{r3}^{\infty} - \frac{\alpha}{\alpha+\beta}\frac{m_{r\theta}^{0}}{2l}\right), \tag{137}$$

$$t_{3r}(R,\theta) = 2\sigma_{r3}^{\infty} - \frac{1}{c}\left(1 + 2\frac{K_0}{K_1}\frac{R}{l}\right)\left(\frac{2l}{R}\sigma_{r3}^{\infty} - \frac{\alpha}{\alpha+\beta}\frac{m_{r\theta}^{0}}{2l}\right). \tag{138}$$

The corresponding symmetric and antisymmetric parts are

$$\sigma_{r3}(R,\theta) = 2\sigma_{r3}^{\infty} - \frac{1}{c}\frac{K_0}{K_1}\frac{R}{l}\left(\frac{2l}{R}\sigma_{r3}^{\infty} - \frac{\alpha}{\alpha+\beta}\frac{m_{\theta r}^0}{2l}\right), \tag{139}$$

$$\tau_{r3}(R,\theta) = \frac{1}{c}\left(1 + \frac{K_0}{K_1}\frac{R}{l}\right)\left(\frac{2l}{R}\sigma_{r3}^{\infty} - \frac{\alpha}{\alpha+\beta}\frac{m_{r\theta}^0}{2l}\right). \tag{140}$$

The other two shear stress components are

$$t_{\theta 3}(R,\theta) = -t_{3\theta}(R,\theta) = -\frac{1}{c}\left(\frac{2l}{R}\sigma_{\theta 3}^{\infty} + \frac{\alpha}{\alpha+\beta}\frac{m_{\theta r}^0}{2l}\right), \tag{141}$$

where

$$m_{\theta r}^0 = -l(a_{12}\sin\theta + a_{21}\cos\theta). \tag{142}$$

The θ component of the rotation at the surface of the bonded inclusion is

$$\varphi_\theta(R,\theta) = -\frac{1}{2\mu}\sigma_{r3}(R,\theta). \tag{143}$$

7.1. Particular types of interface conditions

7.1.1. Type I: The bonded interface cannot transmit the couple stress $m_{r\theta}$

In this case we set $m_{r\theta}^0 = 0$ in Eq. (136) to obtain

$$w = \left\{r - \frac{R^2}{r} + \frac{2l}{c}\left[\frac{1}{K_1}K_1\left(\frac{r}{l}\right) - \frac{R}{r}\right]\right\}\frac{\sigma_{r3}^{\infty}}{\mu}. \tag{144}$$

Accordingly, Eqs. (137)–(141) give

$$t_{r3}(R,\theta) = 2\left(1 + \frac{l}{cR}\right)\sigma_{r3}^{\infty}, \quad t_{3r}(R,\theta) = 2\left[1 - \frac{1}{c}\left(\frac{l}{R} + 2\frac{K_0}{K_1}\right)\right]\sigma_{r3}^{\infty}, \tag{145}$$

$$\sigma_{r3}(R,\theta) = 2\left(1 - \frac{1}{c}\frac{K_0}{K_1}\right)\sigma_{r3}^{\infty}, \quad \tau_{r3}(R,\theta) = \frac{2}{c}\left(\frac{l}{R} + \frac{K_0}{K_1}\right)\sigma_{r3}^{\infty}, \tag{146}$$

$$t_{\theta 3}(R,\theta) = -t_{3\theta}(R,\theta) = -\frac{2}{c}\frac{l}{R}\sigma_{\theta 3}^{\infty}. \tag{147}$$

The rotation at the interface is

$$\varphi_\theta(R,\theta) = -\left(1 - \frac{1}{c}\frac{K_0}{K_1}\right)\frac{\sigma_{r3}^{\infty}}{\mu}. \tag{148}$$

The magnification factors due to couple stress effects are easily extracted from above expressions. For example, if $l = R/3$ and $\beta = 0$, the magnification factor for $t_{r3}(R,\theta)$ is

$$\zeta = 1 + \frac{l}{cR} = 1.086. \tag{149}$$

As expected, the couple stress effects enhance the stress concentration around the rigid inclusion. This increase is more pronounced for higher values of β, and in the limit as $\beta \to \alpha$, ζ approaches the value of 1.141 (for $R = 3l$).

7.1.2. Type II: The rotation φ_θ at the bonded interface as in classical elasticity

If it is assumed that the couple stress $m_{r\theta}$ does not affect the rotation φ_θ ate the bonded surface of the inclusion, so that the material rotation there (or the slope $\partial w/\partial r$) is as predicted by the classical elasticity calculations, we set

$$\varphi_\theta(R,\theta) = -\frac{\sigma_{r3}^\infty}{\mu}. \tag{150}$$

From Eqs. (139) and (143) it then follows that the corresponding couple stress at the interface is

$$m_{r\theta}^0 = m_{r\theta}(R,\theta) = 4\frac{l^2}{R}\frac{\alpha+\beta}{\alpha}\sigma_{r3}^\infty. \tag{151}$$

The displacement field becomes

$$w = \left(r - \frac{R^2}{r}\right)\frac{\sigma_{r3}^\infty}{\mu}. \tag{152}$$

It furthermore follows that antisymmetric parts of the shear stress vanish, while

$$\sigma_{r3} = \mu\frac{\partial w}{\partial r} = \left(1+\frac{R^2}{r^2}\right)\sigma_{r3}^\infty, \quad \sigma_{\theta 3} = \mu\frac{1}{r}\frac{\partial w}{\partial \theta} = \left(1-\frac{R^2}{r^2}\right)\sigma_{\theta 3}^\infty. \tag{153}$$

In this case, therefore, there is no magnification of stress due to couple stress effects, and the stress concentration factor for σ_{r3} is equal to 2 (as in classical elasticity). The corresponding couple stresses are distributed according to

$$m_{rr} = -m_{\theta\theta} = 4\frac{\alpha+\beta}{\alpha}\frac{R^2 l^2}{r^3}\sigma_{\theta 3}^\infty, \quad m_{r\theta} = m_{\theta r} = 4\frac{\alpha+\beta}{\alpha}\frac{R^2 l^2}{r^3}\sigma_{r3}^\infty, \tag{154}$$

where the shear stress $\sigma_{\theta 3}^\infty$ is defined in Eq. (129) and σ_{r3}^∞ in Eq. (126).

7.1.3. Type III: The rotation φ_θ vanishes at the bonded interface

Since $2\varphi_\theta = -\partial w/\partial r$, this type of interface is characterized by the zero displacement slope

$$\left(\frac{\partial w}{\partial r}\right)_{r=R} = 0. \tag{155}$$

The condition (155) implies that both the shear strain ϵ_{r3} and the symmetric component of shear stress σ_{r3} vanish at the interface. The couple stress $m_{r\theta}^0$ required to maintain the zero slope condition (155) is obtained from Eq. (139) by setting $\sigma_{r3}(R,\theta) = 0$, which gives

$$m_{r\theta}^0 = -4l\frac{K_1}{K_0}\sigma_{r3}^\infty. \tag{156}$$

The displacement field is

$$w = \left\{r - \frac{R^2}{r} + 2l\frac{K_1}{K_0}\left[\frac{1}{K_1}K_1\left(\frac{r}{l}\right) - \frac{R}{r}\right]\right\}\frac{\sigma_{r3}^\infty}{\mu}. \tag{157}$$

Since the symmetric component of shear stress vanishes at the interface, the total shear stress there is

$$\tau_{r3}(R,\theta) = -\tau_{3r}(R,\theta) = 2\left[1 + \frac{1}{c}\left(\frac{l}{R} + \frac{\alpha}{\alpha+\beta}\frac{K_1}{K_0}\right)\right]\sigma_{r3}^\infty. \tag{158}$$

The limiting process $l/r \to 0$ reveals that

$$m^0_{r\theta} = 0, \quad \tau_{r3}(R,\theta) = -\tau_{3r}(R,\theta) = 2\sigma^\infty_{r3}. \tag{159}$$

This is an unacceptable solution in classical elasticity, where the stress tensor is necessarily symmetric. The physical reason for the failure of the limiting process to recover the classical elasticity results is that the rotation φ_θ at the interface, as imposed by Eq. (155), does not vanish in classical elasticity but is equal to $-\sigma^\infty_{r3}/\mu$. Thus, the condition (155) at the interface between rigid inclusion and the surrounding matrix can be achieved only within the framework of couple stress elasticity with a non-vanishing characteristic length l. In this case it is also noted that $\sigma_{\theta3}(R,\theta) = 2\sigma^\infty_{\theta3}$ and

$$\tau_{\theta3}(R,\theta) = -\tau_{3\theta}(R,\theta) = -\frac{1}{2c}\left(\frac{4l}{R}\sigma^\infty_{\theta3} + \frac{\alpha}{\alpha+\beta}m^0_{\theta r}\right), \tag{160}$$

where

$$m^0_{\theta r} = 4l\frac{K_1}{K_0}\sigma^\infty_{\theta3}, \quad \sigma^\infty_{\theta3} = -\sigma^\infty_{13}\sin\theta + \sigma^\infty_{23}\cos\theta. \tag{161}$$

In the limit as $l/R \to 0$, the couple stress $m^0_{\theta r}$ and the shear stress component $\tau_{\theta3}(R,\theta)$ both tend to zero.

In a different context, within the class of singular plane strain crack problems, the failure of the couple stress elasticity solution to reduce to classical elasticity solution in the limiting process of the vanishing characteristic length was discussed by Sternberg and Muki (1967). It should also be noted that an analogous condition to (155) of vanishing rotation at the bonded interface was used in plane strain calculations of stress magnification under uniaxial tension by Banks and Sokolowski (1968), although no discussion of the relationship to classical elasticity solution was given in the limit of vanishingly small characteristic length.

8. Circular inhomogeneity

We now consider a more general case of the circular inhomogeneity of radius R and material properties $\hat\mu$, $\hat\alpha$ and $\hat\beta$, surrounded by an infinite matrix with material properties μ, α and β, under remote shear loading σ^∞_{r3} as in Eq. (126). The displacement functions are

$$w_{\text{in}} = \left[\widehat{A}r + \widehat{C}RI_1\left(\frac{r}{\hat l}\right)\right]\cos\theta + \left[\widehat{B}r + \widehat{D}RI_1\left(\frac{r}{\hat l}\right)\right]\sin\theta, \tag{162}$$

$$w_{\text{out}} = \left[\frac{\sigma^\infty_{13}}{\mu}r + A\frac{R^2}{r} + CRK_1\left(\frac{r}{l}\right)\right]\cos\theta + \left[\frac{\sigma^\infty_{23}}{\mu}r + B\frac{R^2}{r} + DRK_1\left(\frac{r}{l}\right)\right]\sin\theta, \tag{163}$$

where $\hat l^2 = \hat\alpha/\hat\mu$ and $l^2 = \alpha/\mu$. The boundary conditions at the bonded interface are taken to be

$$w_{\text{in}}(R,\theta) = w_{\text{out}}(R,\theta), \tag{164}$$

$$\bar t^{\text{in}}_{r3}(R,\theta) = \bar t^{\text{out}}_{r3}(R,\theta), \tag{165}$$

$$m^{\text{in}}_{r\theta}(R,\theta) = m^{\text{out}}_{r\theta}(R,\theta) = m^0_{r\theta}. \tag{166}$$

The couple stress $m^0_{r\theta} = l(a_{12}\cos\theta - a_{21}\sin\theta)$ is assumed to be known at the points of the interface. The four equations for the constants $\widehat{A}$, A, $\widehat{C}$ and C, resulting from the imposed boundary conditions, are

$$\widehat{A} - A + \widehat{I}_1\widehat{C} - K_1 C = \frac{\sigma_{13}^{\infty}}{\mu}, \tag{167}$$

$$\hat{\mu}\widehat{A} + \mu\left(1 + 2\frac{\alpha+\beta}{\alpha}\frac{l^2}{R^2}\right)A + \hat{\mu}\frac{\hat{\alpha}+\hat{\beta}}{\hat{\alpha}}\frac{\hat{l}}{R}\widehat{I}_2\widehat{C} + \mu\frac{\alpha+\beta}{\alpha}\frac{l}{R}K_2 C = \sigma_{13}^{\infty}, \tag{168}$$

$$\frac{\hat{\alpha}+\hat{\beta}}{\hat{\alpha}}\frac{\hat{l}}{R}\widehat{I}_2\widehat{C} - \widehat{I}_1\widehat{C} = \frac{l}{R}\frac{a_{12}}{2\hat{\mu}}, \tag{169}$$

$$2\frac{\alpha+\beta}{\alpha}\frac{l^2}{R^2}A + K_1 C + \frac{\alpha+\beta}{\alpha}\frac{l}{R}K_2 C = -\frac{l}{R}\frac{a_{12}}{2\mu}. \tag{170}$$

In above equations, for brevity, the notation is used

$$\widehat{I}_\nu = I_\nu\left(\frac{R}{\hat{l}}\right), \quad K_\nu = K_\nu\left(\frac{R}{l}\right), \quad \nu = 0, 1, 2. \tag{171}$$

The solution of the system of Eqs. (167)–(170) is

$$A = \frac{\mu-\hat{\mu}}{\mu+\hat{\mu}}\left(\frac{\sigma_{13}^{\infty}}{\mu} + K_1 C\right), \quad \widehat{A} = \frac{2}{\mu+\hat{\mu}}\left(\sigma_{13}^{\infty} + \mu K_1 C\right) - \widehat{I}_1\widehat{C}, \tag{172}$$

$$\widehat{I}_1\widehat{C} = \frac{1}{\hat{c}}\frac{l}{R}\frac{a_{12}}{2\hat{\mu}}, \quad K_1 C = -\frac{1}{c}\left(\frac{2l}{R}\frac{\mu-\hat{\mu}}{\mu+\hat{\mu}}\frac{\sigma_{13}^{\infty}}{\mu} + \frac{\alpha}{\alpha+\beta}\frac{a_{12}}{2\mu}\right), \tag{173}$$

where

$$\hat{c} = \frac{\hat{\alpha}+\hat{\beta}}{\hat{\alpha}}\frac{\hat{l}}{R}\frac{\widehat{I}_2}{\widehat{I}_1} - 1, \quad c = \frac{K_0}{K_1} + \frac{4l}{R}\frac{\mu}{\mu+\hat{\mu}} + \frac{\alpha}{\alpha+\beta}\frac{R}{l}. \tag{174}$$

The constants $\widehat{B}$, B, $\widehat{D}$ and D are defined by the same expressions, except that σ_{13}^{∞} is replaced by σ_{23}^{∞}, and a_{12} by $-a_{21}$. The results for the rigid inclusion and void are recovered in the limits ($\hat{\mu}, \hat{\alpha}, \hat{\beta} \to \infty$, $\hat{l} \to 0$) and ($\mu, \alpha, \beta \to 0$, $l \to 0$), respectively.

8.1. Different interface conditions

Four types of interface conditions may be considered regarding the specification of the couple stress $m_{r\theta}^0$. The first type is based on the assumption that the interface cannot transmit this couple stress at all, i.e.,

$$m_{r\theta}^0 = 0 \quad (a_{12} = a_{21} = 0). \tag{175}$$

The second type of interface condition is obtained if it is required that the rotations $\varphi_\theta^{\text{in}}(R,\theta)$ and $\varphi_\theta^{\text{out}}(R,\theta)$ are related to each other in the same manner as in classical elasticity. Since displacement fields in classical elasticity are

$$w_{\text{in}} = 2r\frac{\sigma_{r3}^{\infty}}{\mu+\hat{\mu}}, \quad w_{\text{out}} = \left(r + \frac{\mu-\hat{\mu}}{\mu+\hat{\mu}}\frac{R^2}{r}\right)\frac{\sigma_{r3}^{\infty}}{\mu}, \tag{176}$$

there follows

$$\frac{\partial w_{\text{in}}}{\partial r} = 2\frac{\sigma_{r3}^{\infty}}{\mu+\hat{\mu}}, \quad \frac{\partial w_{\text{out}}}{\partial r} = \left(1 - \frac{\mu-\hat{\mu}}{\mu+\hat{\mu}}\frac{R^2}{r^2}\right)\frac{\sigma_{r3}^{\infty}}{\mu}. \tag{177}$$

Thus, at $r = R$ we have

$$\hat{\mu}\frac{\partial w_{\text{in}}}{\partial r} = \mu\frac{\partial w_{\text{out}}}{\partial r}, \tag{178}$$

which is then required to also hold in couple stress elasticity.

The third type of interface condition is obtained by requiring that the rotations at the interface are actually equal to each other, so that

$$\frac{\partial w_{\text{in}}}{\partial r} = \frac{\partial w_{\text{out}}}{\partial r} \quad \text{at } r = R. \tag{179}$$

Naturally, the couple stress elasticity solution for this type of interface does not reduce to classical elasticity in the limit of vanishing couple stress effects, because the relationship (178) and not (179) holds at the interface in classical elasticity. The equal rotations at the interface between the circular inhomogeneity and the surrounding matrix were also assumed in plane strain calculations of stress magnification under uniaxial tension by Hartranft and Sih (1965) and Weitsman (1965), but without discussion of the relationship to classical elasticity solution in the limit of vanishingly small characteristic length. The relationship between the rotations in classical plain-strain elasticity can be calculated from the results obtained by Lubarda and Markenscoff (1999a).

Finally, the fourth type of interface condition may be associated with the requirement for the continuity of the shear stress t_{3r} across the interface, i.e.,

$$t_{3r}^{\text{in}}(R,\theta) = t_{3r}^{\text{out}}(R,\theta). \tag{180}$$

In the subsequent calculations, we shall adopt the first type of interface condition, defined by the vanishing couple stress along the interface and Eq. (175). (This type of interface condition is to some extent similar to the so-called slipping interface of classical plane-strain elasticity which can transmit the normal stress σ_{rr}, but not the shear stress $\sigma_{r\theta}$). It readily follows that $\widehat{I}_1\widehat{C} = \widehat{I}_1\widehat{D} = 0$, and

$$A = \frac{\mu-\hat{\mu}}{\mu+\hat{\mu}}\left(\frac{\sigma_{13}^{\infty}}{\mu} + K_1 C\right), \quad B = \frac{\mu-\hat{\mu}}{\mu+\hat{\mu}}\left(\frac{\sigma_{23}^{\infty}}{\mu} + K_1 D\right), \tag{181}$$

$$\widehat{A} = \frac{2}{\mu+\hat{\mu}}\left(\sigma_{13}^{\infty} + \mu K_1 C\right), \quad \widehat{B} = \frac{2}{\mu+\hat{\mu}}\left(\sigma_{23}^{\infty} + \mu K_1 D\right), \tag{182}$$

$$K_1 C = -b\frac{\sigma_{13}^{\infty}}{\mu}, \quad K_1 D = -b\frac{\sigma_{23}^{\infty}}{\mu}. \tag{183}$$

The parameter b is defined by

$$b = \frac{2}{c}\frac{l}{R}\frac{\mu-\hat{\mu}}{\mu+\hat{\mu}}, \tag{184}$$

with c as in Eq. (174). The displacement fields are accordingly

$$w_{\text{in}} = 2(1-b)r\frac{\sigma_{r3}^{\infty}}{\mu+\hat{\mu}}, \tag{185}$$

$$w_{\text{out}} = \left[r + (1-b)\frac{\mu-\hat{\mu}}{\mu+\hat{\mu}}\frac{R^2}{r} - b\frac{R}{K_1}K_1\left(\frac{r}{l}\right)\right]\frac{\sigma_{r3}^{\infty}}{\mu}. \tag{186}$$

The corresponding shear stress components are

$$t_{r3}^{\text{in}} = (1-b)\frac{2\hat{\mu}}{\mu+\hat{\mu}}\sigma_{r3}^{\infty}, \quad t_{r3}^{\text{out}} = \left[1-(1-b)\frac{\mu-\hat{\mu}}{\mu+\hat{\mu}}\frac{R^2}{r^2}\right]\sigma_{r3}^{\infty}, \tag{187}$$

$$t_{\theta 3}^{\text{in}} = (1-b)\frac{2\hat{\mu}}{\mu+\hat{\mu}}\sigma_{\theta 3}^{\infty}, \quad t_{\theta 3}^{\text{out}} = \left[1+(1-b)\frac{\mu-\hat{\mu}}{\mu+\hat{\mu}}\frac{R^2}{r^2}\right]\sigma_{\theta 3}^{\infty}. \tag{188}$$

Clearly, there is a uniform stress and strain distribution and no couple stresses at all within the inhomogeneity, for the considered type of interface that is incapable to transmit the couple stress $m_{r\theta}(R,\theta)$. A discontinuity in shear stress t_{3r} across the interface is

$$t_{3r}^{\text{out}}(R,\theta) - t_{3r}^{\text{in}}(R,\theta) = b\left(3+2\frac{R}{l}\frac{K_0}{K_1}\right)\sigma_{r3}^{\infty}. \tag{189}$$

The couple stresses in the outside material are

$$m_{rr}^{\text{out}} = -m_{\theta\theta}^{\text{out}} = -4(\alpha+\beta)\frac{\mu-\hat{\mu}}{\mu+\hat{\mu}}\frac{1}{r}\left\{(1-b)\frac{R^2}{r^2} - \frac{1}{cK_1}\left[K_0\left(\frac{r}{l}\right)+\frac{l}{r}K_1\left(\frac{r}{l}\right)\right]\right\}\frac{\sigma_{\theta 3}^{\infty}}{\mu}, \tag{190}$$

$$m_{r\theta}^{\text{out}} = -4(\alpha+\beta)\frac{\mu-\hat{\mu}}{\mu+\hat{\mu}}\frac{1}{r}\left\{(1-b)\frac{R^2}{r^2} - \frac{1}{cK_1}\left[K_0\left(\frac{r}{l}\right)+\left(\frac{\alpha}{\alpha+\beta}\frac{r}{l}+2\frac{l}{r}\right)K_1\left(\frac{r}{l}\right)\right]\right\}\frac{\sigma_{r3}^{\infty}}{\mu}. \tag{191}$$

The expression for $m_{\theta r}^{\text{out}}$ is as given by Eq. (191), except that the coefficient $\alpha/(\alpha+\beta)$ multiplying the r/l term is replaced by $\beta/(\alpha+\beta)$. Thus, a discontinuity of the couple stress $m_{\theta r}^{\text{out}}$ across the interface is

$$m_{\theta r}^{\text{out}}(R,\theta) - m_{\theta r}^{\text{in}}(R,\theta) = \frac{4}{cl}(\beta-\alpha)\frac{\mu-\hat{\mu}}{\mu+\hat{\mu}}\frac{\sigma_{r3}^{\infty}}{\mu}. \tag{192}$$

8.2. Shear stress magnification factors

The shear stress components at the interface are obtained from Eqs. (187) and (188) by using $r = R$. This gives

$$t_{r3}^{\text{in}} = (1-b)\frac{2\hat{\mu}}{\mu+\hat{\mu}}\sigma_{r3}^{\infty}, \quad t_{r3}^{\text{out}} = \frac{1}{\mu+\hat{\mu}}\left[2\hat{\mu}+b(\mu-\hat{\mu})\right]\sigma_{r3}^{\infty}, \tag{193}$$

$$t_{\theta 3}^{\text{in}} = (1-b)\frac{2\hat{\mu}}{\mu+\hat{\mu}}\sigma_{\theta 3}^{\infty}, \quad t_{\theta 3}^{\text{out}} = \frac{1}{\mu+\hat{\mu}}\left[2\mu-b(\mu-\hat{\mu})\right]\sigma_{\theta 3}^{\infty}. \tag{194}$$

The classical elasticity results follow from Eqs. (193) and (194) by setting $b = 0$. Thus, the stress magnification factors due to couple stress effects are

$$\zeta_{r3}^{\text{in}} = \zeta_{\theta 3}^{\text{in}} = 1-b, \quad \zeta_{r3}^{\text{out}} = 1+\frac{b}{2}\frac{\mu-\hat{\mu}}{\hat{\mu}}, \quad \zeta_{\theta 3}^{\text{out}} = 1-\frac{b}{2}\frac{\mu-\hat{\mu}}{\mu}. \tag{195}$$

For the considered type of interface, there is no magnification of the shear stress if two materials have the same shear modulus ($\mu = \hat{\mu}$). Actually, in this case the specification of the vanishing couple stress $m_{r\theta}$ at the interface yields a classical elasticity solution, regardless of the couple stress moduli α and β, since from Eqs. (190) and (191) $m_{rr}^{\text{out}} = -m_{\theta\theta}^{\text{out}} = 0$ and $m_{r\theta}^{\text{out}} = m_{\theta r}^{\text{out}} = 0$ everywhere in the matrix. This is also the case for the matrix with the vanishing couple stress moduli α and β, since then $l = 0$ and thus $b = 0$, regardless of the

values of the inhomogeneity couple stress moduli $\hat{\alpha}$ and $\hat{\beta}$. Similar conclusions were reached by Weitsman (1965) in his plane-strain analysis.

Since c is necessarily positive by Eq. (174), the parameter b is positive if $\mu > \hat{\mu}$. Thus, $\zeta_{r3}^{\text{in}} > 1$ if $\mu < \hat{\mu}$, and vice versa, i.e., the maximum stress in soft inhomogeneity is reduced, and in stiff inhomogeneity enhanced by the incorporation of couple stress effects. Similar conclusions were obtained by Wang (1970) in the case of spherical inhomogeneity, and Gupta (1976) for circular inclusion under conditions of plane strain. On the other hand, ζ_{r3}^{out} is always greater than one, and $\zeta_{\theta 3}^{\text{out}}$ is always less than one (unless $\mu = \hat{\mu}$). For the rigid inclusion ($\hat{\mu} \to \infty$), and the void ($\hat{\mu} \to 0$) we have, respectively,

$$b = -\frac{2\frac{l}{R}}{\frac{K_0}{K_1} + \frac{\alpha}{\alpha+\beta}\frac{R}{l}}, \quad b = \frac{2\frac{l}{R}}{\frac{K_0}{K_1} + \frac{4l}{R} + \frac{\alpha}{\alpha+\beta}\frac{R}{l}}, \tag{196}$$

confirming the results from earlier sections, and indicating that the couple stress effects increase the maximum stress in the case of rigid inclusion, and decrease the maximum stress in the case of a void.

Finally, we observe that the solutions for the inclusion and inhomogeneity problems have a simple direct relationship in the case when the interface is unable to support the couple stress $m_{r\theta}$. The transition between the two solutions is obtained by using the substitution

$$\frac{\mu - \hat{\mu}}{\mu + \hat{\mu}}\frac{\sigma_{r3}^{\infty}}{\mu} = \epsilon_{r3}^{\bullet}, \tag{197}$$

as can easily be verified by comparing Eqs. (97)–(100) with Eqs. (181)–(186).

9. Conclusion

We have presented in this paper the solutions for selected problems of anti-plane strain couple stress elasticity, which can be conveniently treated in polar coordinates by using the well-known representations of solutions for the Laplacian and Helmholtz partial differential equations. An eigenstrain inclusion problem is solved for uniform and polynomial distribution of the stress-free transformation strain. It is shown that the strain within a circular inclusion, with a prescribed uniform eigenstrain, can be either uniform or non-uniform, depending on the type of boundary condition imposed at the interface between the inclusion and surrounding matrix. The components of the Eshelby tensor are calculated in each case. Their dependence on the material parameters is discussed. The amplification of the stress concentration factors is then calculated for circular void, rigid inclusion, and inhomogeneity under remote shear stress. It is found that the couple stresses decrease the shear stress concentration for softer, and increase for stiffer inhomogeneities. The comparison is made with related results from axisymmetric and plane-strain problems. Particular attention is given to different types of interface conditions between the rigid inclusion or inhomogeneity and the surrounding matrices, and their effects on the stress magnification. The shear stress and couple stress discontinuities across the interface, and the relationship between the inhomogeneity and its equivalent eigenstrain inclusion problem are also discussed.

Acknowledgement

Research support from the Montenegrin Academy of Sciences and Arts is kindly acknowledged.

References

Anthoine, A., 2000. Effect of couple-stresses on the elastic bending of beams. Int. J. Solids Struct. 37, 1003–1018.

Banks, C.B., Sokolowski, M., 1968. On certain two-dimensional applications of the couple stress theory. Int. J. Solids Struct. 4, 15–29.

Bouyge, F., Jasiuk, I., Ostoja-Starzewski, M., 2001. A micromechanically based couple-stress model of an elastic two-phase composite. Int. J. Solids Struct. 38, 1721–1735.

Brulin, O., Hsieh, R.K.T. (Eds.), 1982. Mechanics of Micropolar Media. World Scientific, Singapore.

Chen, S., Wang, T., 2001. Strain gradient theory with couple stress for crystalline solids. Eur. J. Mech. A/Solids 20, 739–756.

Chen, S., Wang, T., 2002. A new deformation theory with strain gradient effects. Int. J. Plast. 18, 971–995.

Cheng, Z.-Q., He, L.-H., 1995. Micropolar elastic fields due to a spherical inclusion. Int. J. Eng. Sci. 33, 389–397.

Cheng, Z.-Q., He, L.-H., 1997. Micropolar elastic fields due to a circular cylindrical inclusion. Int. J. Eng. Sci. 35, 659–668.

Cowin, S.C., 1970a. An incorrect inequality in micropolar elasticity. Z. Angew. Math. Phys. 21, 494–497.

Cowin, S.C., 1970b. Stress functions for Cosserat elasticity. Int. J. Solids Struct. 6, 389–398.

De Borst, R., Van der Giessen, E. (Eds.), 1998. Material Instabilities in Solids. John Wiley & Sons, Chichester.

Dhaliwal, R.S., Singh, A., 1987. Micropolar thermoelasticity. In: Hetnarski, R.B. (Ed.), Thermal Stresses II. Elsevier Science, Amsterdam, pp. 269–328.

Eringen, A.C., 1968. Theory of micropolar elasticity. In: Liebowitz, H. (Ed.), Fracture: An Advanced Treatise, vol. II. Academic Press, New York, pp. 621–729.

Eringen, A.C., 1999. Microcontinuum Field Theories. Springer-Verlag, New York.

Eshelby, J.D., 1957. The determination of the elastic field of an ellipsoidal inclusion, and related problems. Proc. Roy. Soc. Lond. A 241, 376–396.

Fleck, N.A., Hutchinson, J.W., 1997. Strain gradient plasticity. Adv. Appl. Mech. 33, 295–361.

Gauthier, R.D., Jahsman, W.E., 1975. A quest for micropolar elastic constants. J. Appl. Mech. 42, 369–374.

Grioli, G., 1960. Elasticità asimmetrica. Ann. Mat. pura Appl., Ser IV 50, 389–417.

Gupta, S.C., 1976. An inhomogeneity problem in couple stress theory. Proc. Indian Acad. Sci. A 84, 181–193.

Hartranft, R.J., Sih, G.C., 1965. The effect of couple stresses on the stress concentration of a circular inclusion. J. Appl. Mech. 32, 429–431.

Hsieh, R.K.T., 1982. Volume defects in nonlocal micropolar elasticity. Int. J. Eng. Sci. 20, 261–270.

Jasiuk, I., Ostoja-Starzewski, M., 1995. Planar Cosserat elasticity of materials with holes and intrusions. Appl. Mech. Rev. 48 (11), S11–S18.

Kaloni, P.N., Ariman, T., 1967. Stress concentration effects in micropolar elasticity. Z. Angew. Math. Phys. 18, 136–141.

Kishida, M., Sasaki, K., Ishii, S., 1990. Torsion of a circular bar with annular groove in couple-stress theory. Int. J. Eng. Sci. 28, 773–781.

Koiter, W.T., 1964. Couple-stresses in the theory of elasticity. Proc. Ned. Akad. Wet. (B) 67, I: 17–29, II: 30–44.

Lakes, R.S., 1982. Dynamic study of couple stress effects in human compact bone. J. Biomech. Eng. 104, 6–11.

Lakes, R.S., 1985. A pathological situation in micropolar elasticity. J. Appl. Mech. 52, 234–235.

Lakes, R.S., 1995. Experimental methods for study of Cosserat elastic solids and other generalized elastic continua. In: Mühlhaus, H.-B. (Ed.), Continuum Models for Materials with Microstructure. John Wihley & Sons, Chichester, pp. 1–25.

Lubarda, V.A., 2003a. The effect of couple stresses on dislocation strain energy. Int. J. Solids Struct., in this issue.

Lubarda, V.A., 2003b. Mohr's circle for non-symmetric stresses and couple stresses, submitted for publication.

Lubarda, V.A., Markenscoff, X., 1999a. Energies of circular inclusions: sliding versus bonded interfaces. Proc. R. Soc. Lond. A 455, 961–974.

Lubarda, V.A., Markenscoff, X., 1999b. Configurational forces and conservation laws in couple stress elasticity. In: Zabaras, N. et al. (Eds.), Proceedings on the Integration of Material, Process and Product Design. A.A. Balkema Publishers, Rotterdam, pp. 53–58.

Lubarda, V.A., Markenscoff, X., 2000. Conservation integrals in couple stress elasticity. J. Mech. Phys. Solids 48, 553–564.

Lubarda, V.A., Markenscoff, X., 2003. On conservation integrals in micropolar elasticity. Phil. Mag. A 83, 1365–1377.

Majumdar, M., 1982. Effect of couple-stress on stress-concentration around an elliptic hole within an elastic solid. Indian J. Pure Appl. Math. 13, 1526–1536.

Mindlin, R.D., 1963. Micro-structure in linear elasticity. Arch. Ration. Mech. Anal. 1, 51–78.

Mindlin, R.D., 1963. Influence of couple-stresses on stress concentrations. Exp. Mech. 3, 573–579.

Mindlin, R.D., Tiersten, H.F., 1962. Effects of couple-stresses in linear elasticity. Arch. Ration. Mech. Anal. 11, 415–448.

Muki, R., Sternberg, E., 1965. The influence of couple-stresses on singular stress concentrations in elastic solids. Z. Angew. Math. Phys. 16, 611–648.

Mura, T., 1987. Micromechanics of Defects in Solids. Martinus-Nijhoff, Deventer, The Netherlands.

Neuber, H., 1966. Über Probleme der Spannungskonzentration im Cosserat–Körper. Acta Mech. 2, 48–69.

Nowacki, W., 1970. The "second" plane problem of micropolar elasticity. Bull. Acad. Polon. Sci., Sér. Sci. Techn. 18, 899–906.

Nowacki, W., 1986. Theory of Asymmetric Elasticity (translated by H. Zorski). Pergamon Press, Oxford and PWN—Polish Sci. Publ., Warszawa.

Pettinger, A., Abeyaratne, R., 2000. On the nucleation and propagation of thermoelastic phase transformations in anti-plane shear. Part 1. Couple-stress theory. Comp. Mech. 26, 13–24.

Reddy, K., Venkatasubramanian, N.K., 1978. On the flexural rigidity of a micropolar elastic circular cylinder. J. Appl. Mech. 45, 429–431.

Smyshlyaev, V.P., Fleck, N.A., 1996. The role of strain gradients in the grain size effect for polycrystals. J. Mech. Phys. Solids 44, 465–495.

Sternberg, E., Muki, R., 1967. The effect of couple-stresses on the stress concentration around a crack. Int. J. Solids Struct. 3, 69–95.

Valiev, R.Z., Islamgaliev, R.K., Alexandrov, I.V., 2000. Bulk nanostructured materials from severe plastic deformation. Progr. Mater. Sci. 45, 103–189.

Wang, T.T., 1970. The effects of couple-stress on maximum stress and its location around spherical inclusions. J. Appl. Mech. 92, 865–868.

Watson, G.N., 1995. A Treatise on the Theory of Bessel Functions, 2nd ed Cambridge University Press, Cambridge.

Weitsman, Y., 1965. Couple-stress effects on stress concentration around a cylindrical inclusion in a field of uniaxial tension. J. Appl. Mech. 32, 424–428.

Yang, J.F.C., Lakes, R.S., 1982. Experimental study of micropolar and couple stress elasticity in compact bone in bending. J. Biomech. 15, 91–98.

Yavari, A., Sarkani, S., Moyer, E.T., 2002. On fractal cracks in micropolar elastic solids. J. Appl. Mech. 69, 45–54.