IN-PLANE COALESCENCE OF CRACKS

Jean-Baptiste Leblond

Institut Jean Le Rond d'Alembert,
Université Pierre et Marie Curie
and French Academy of Sciences

OUTLINE

1. Introduction
2. Sketch of Bueckner-Rice's theory
3. Application to a system of two slit-cracks
4. Calculation of the fundamental kernel
5. Case of a large distance between the outer fronts
6. Evolution of the fronts during crack propagation
7. Statistics of the deformation of the fronts
8. Conclusion

1. INTRODUCTION

Some previous works have studied the evolution in time of the deformation of the front of planar cracks propagating in heteregeneous elastic solids: Rice and coworkers, Ramanathan and Fisher, Bower and Ortiz, Lazarus and Leblond, …

The main element required was formulae providing the distribution of the stress intensity factors (SIFs) along the crack front, after some slight but otherwise arbitrary in-plane perturbation of this front.

Up to now, these formulae have been available for geometries involving a single crack:

* Keer, Rice: the semi-infinite crack in mode I

* Gao and Rice: the semi-infinite crack under general loading conditions; the internal and external circular cracks in mode I

* Gao: the internal circular crack under general loading conditions

* Leblond, Mouchrif and Perrin: the tunnel-crack in mode I

* Favier, Lazarus and Leblond: the tunnel-crack under general loading conditions

Here we consider the simplest possible configuration involving multiple cracks: a system of two parallel coplanar identical slit-cracks loaded in tension.

This allows for the study of the deformation of the inner cracks fronts during the coalescence of the cracks.

2. SKETCH OF BUECKNER-RICE'S THEORY

Bueckner

→ considers solutions of the homogeneous Navier equations having an unusually strong singularity near the crack front.

Rice

→ relates these non-standard solutions to derivatives of the usual solutions with respect to the crack advance.

In-plane perturbation of a planar crack:

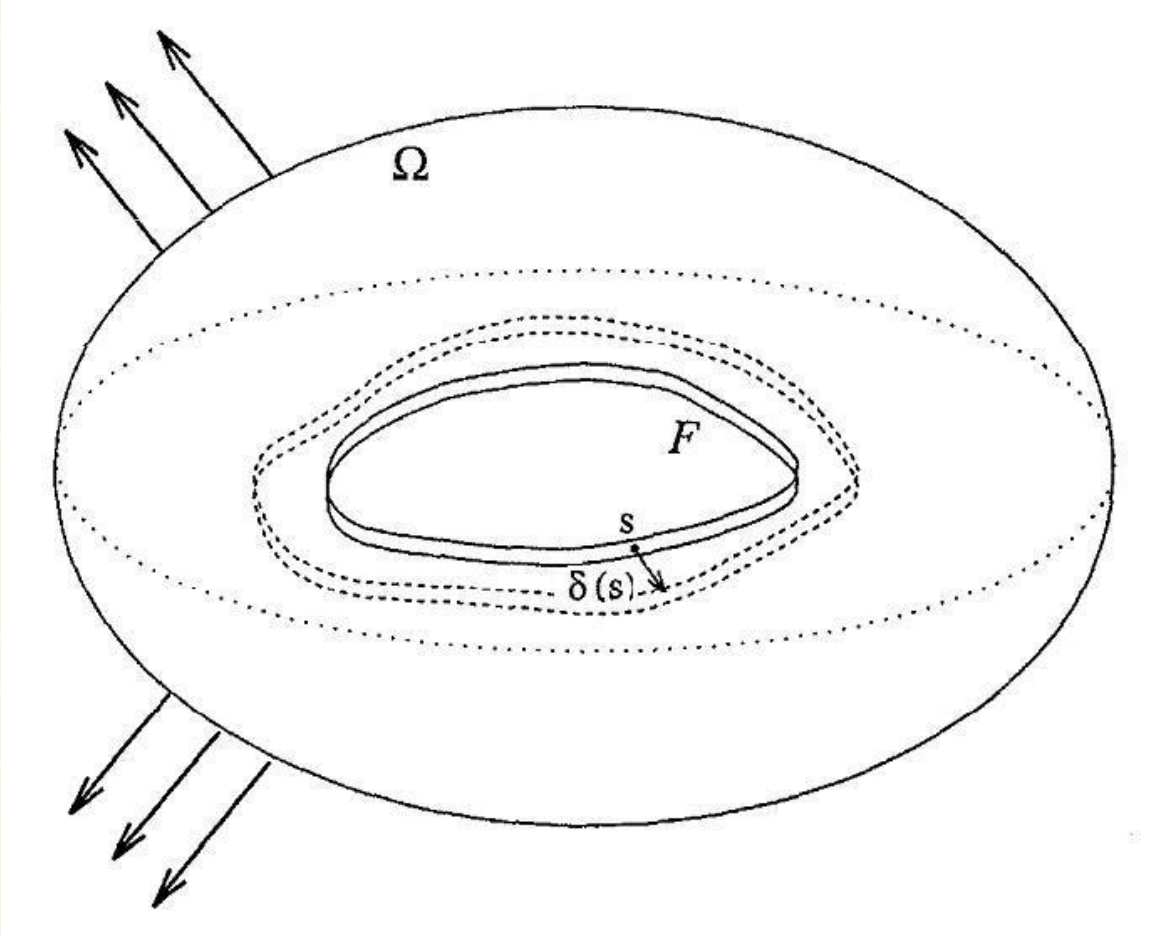

F : crack front;

s : curvilinear distance along the crack front;

$\delta(s)$: local crack advance.

Rice's first formula, for the perturbation of the (mode I) SIF:

$$\delta K(s) = \left[\delta K(s)\right]_{\delta(s')\equiv\delta(s),\forall s'} + PV\int_F Z(s,s')K(s')\left[\delta(s')-\delta(s)\right]ds'$$

$K(s)$: unperturbed SIF at location s ;

$\delta K(s)$: perturbation of the SIF at location s ;

$\left[\delta K(s)\right]_{\delta(s')\equiv\delta(s),\forall s'}$: value of $\delta K(s)$ for a uniform crack advance equal to $\delta(s)$;

$Z(s,s')$: « fundamental kernel » (FK) tied to Bueckner's mode I weight function.

General properties of the FK:

1) For $s' \to s$:

$$Z(s,s') \sim \frac{1}{2\pi D^2(s,s')}$$

where $D(s,s')$ is the cartesian distance between points s and s';

2) For all s and s':

$$Z(s',s) = Z(s,s')$$

Rice's second formula, for the perturbation of the FK:

$$\boxed{\delta Z(s_1, s_2) = PV \int_F Z(s_1, s) Z(s, s_2) \delta(s) ds}$$

where the crack advance $\delta(s)$ must be zero at locations s_1 and s_2.

3. APPLICATION TO A SYSTEM OF TWO SLIT-CRACKS

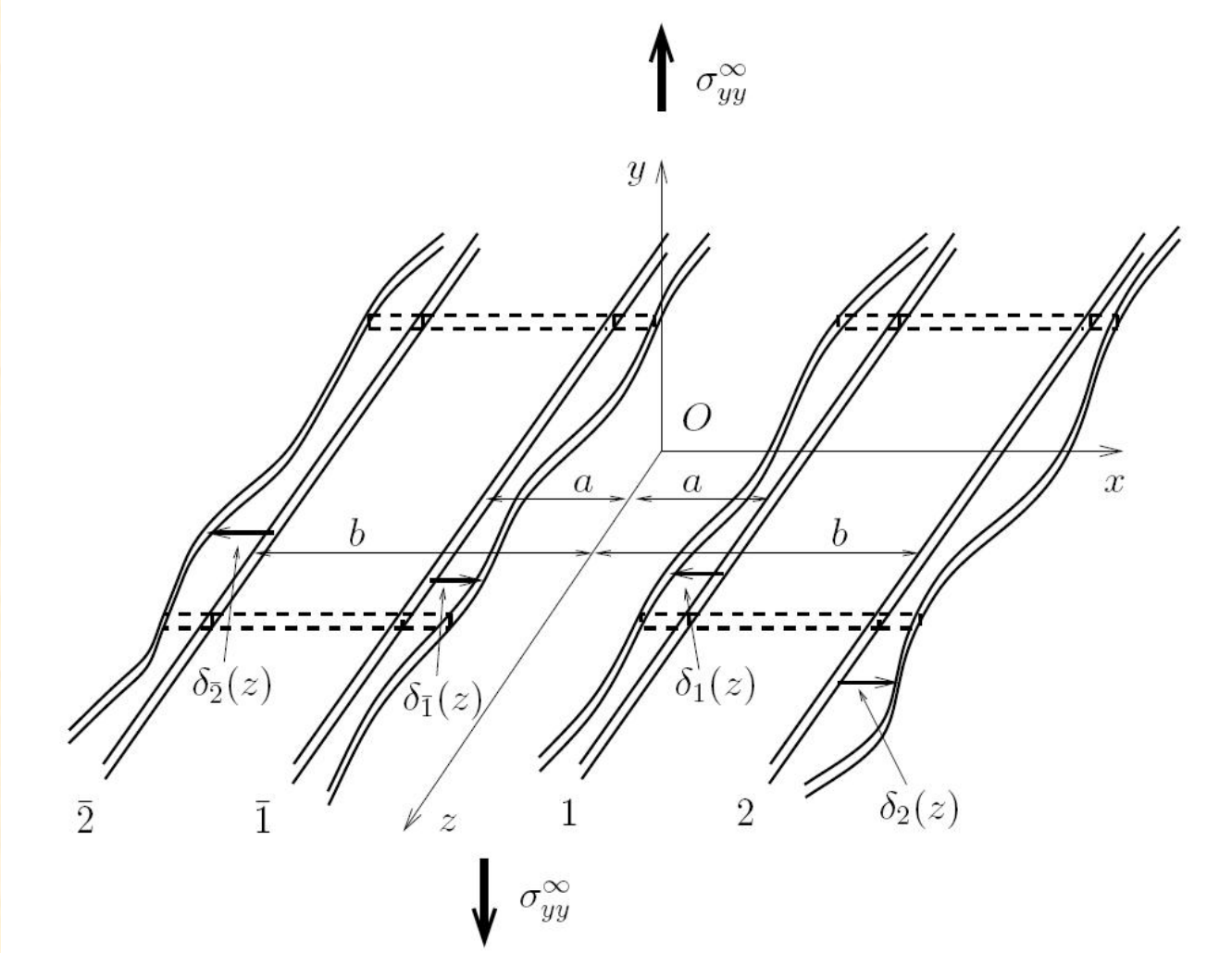

$$k \equiv \frac{a}{b}$$

Notations:

1) $$\boxed{Z(s,s') \equiv \frac{f_\alpha\left[(z-z')/b\right]}{(z-z')^2}}$$ if the points z and z' lie on the same front α ;

2) $$\boxed{Z(s,s') \equiv \frac{g_{\alpha\beta}\left[(z-z')/b\right]}{b^2}}$$ if the points z and z' lie on different fronts α and β .

All « influence functions » f_α and $g_{\alpha\beta}$ are unknown and must be calculated.

General properties of the FK + symmetries $\longrightarrow$

all functions are even; $f_\alpha = f_{\bar{\alpha}}$; $g_{\alpha\beta} = g_{\beta\alpha} = g_{\bar{\alpha}\bar{\beta}}$;

$$f_1(0) = f_2(0) = \frac{1}{2\pi}$$

Rice's first formula

$$\delta K_\alpha(z) = C_\alpha \delta_\alpha(z) + PV\int_{-\infty}^{+\infty} f_\alpha\left(\frac{z-z'}{b}\right) K_\alpha \frac{\delta_\alpha(z') - \delta_\alpha(z)}{(z-z')^2} dz'$$
$$+ \sum_{\beta \neq \alpha} \int_{-\infty}^{+\infty} g_{\alpha\beta}\left(\frac{z-z'}{b}\right) K_\beta \frac{\delta_\beta(z')}{b^2} dz'$$

* The constants C_α depend on both the geometry and the loading.

* The functions f_α and $g_{\alpha\beta}$ depend on the sole geometry.

Special case: uniform advance of a single front

Then the 2D solution (in a plane parallel to xy) yields the variations of the SIFs on the various fronts. From there, one gets the values of the constants C_α and the integrals $\int_{-\infty}^{+\infty} g_{\alpha\beta}(u)du$ (in terms of standard elliptic integrals).

4. CALCULATION OF THE FUNDAMENTAL KERNEL

Because of their properties, only 6 influence functions must be determined : f_1 , f_2 , g_{12} , $g_{1\bar{1}}$, $g_{1\bar{2}}$, $g_{2\bar{2}}$.

Principle:

1) Application of Rice's second formula for the variation of the FK to special perturbations of the fronts preserving the shape and relative dimensions of the cracks while modifying their size and orientation

$\longrightarrow$ integro-differential equations on the functions;

2) Transformation of these integro-differential equations into nonlinear ODEs via Fourier transform (FT) in the direction of the fronts;

3) Numerical integration of these ODEs for each value of the parameter k.

<u>Major advantage</u>: one does not attempt to solve the full complex 3D elasticity problem implied but concentrates on the sole feature of interest: the distribution of the SIFs along the fronts.

First perturbation: translatory motions of fronts $2, \bar{1}$ and $\bar{2}$, crack front 1 remaining fixed.

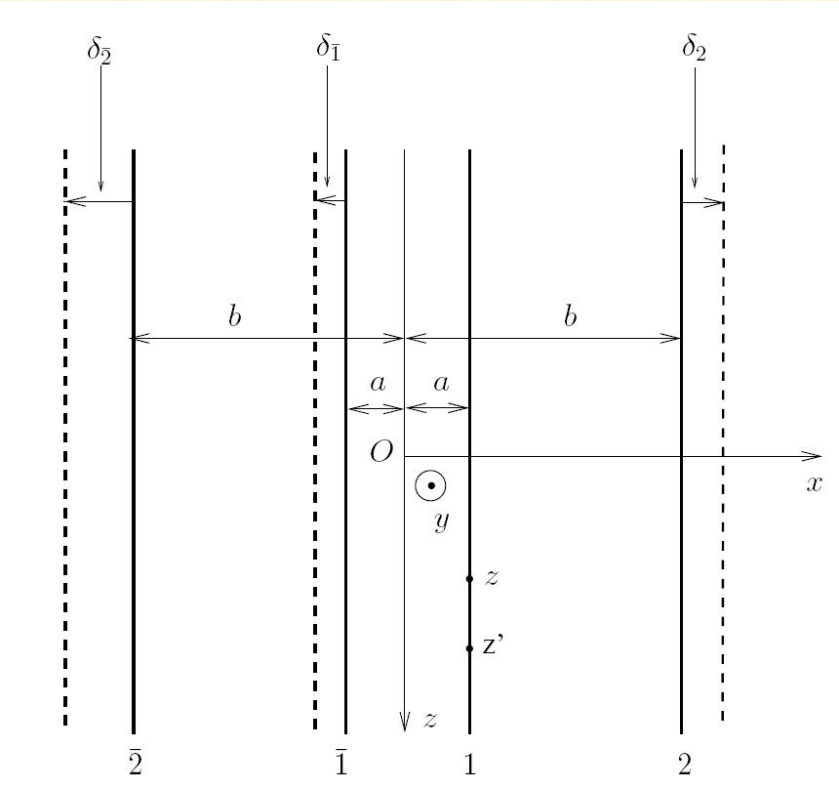

$$\begin{cases} \delta_1 & = & 0 \\ \delta_2 & = & (1-k)\varepsilon \\ \delta_{\bar{1}} & = & -2k\varepsilon \\ \delta_{\bar{2}} & = & (1+k)\varepsilon \end{cases}$$

$\longrightarrow$ Equation on $f_1(u)$:

$$\boxed{\frac{f_1'}{u} = -(1-k)g_{12} * g_{12} + 2kg_{1\bar{1}} * g_{1\bar{1}} - (1+k)g_{1\bar{2}} * g_{1\bar{2}}}$$

Second perturbation: translatory motions of fronts $1, \bar{1}$ and $\bar{2}$, front 2 remaining fixed.

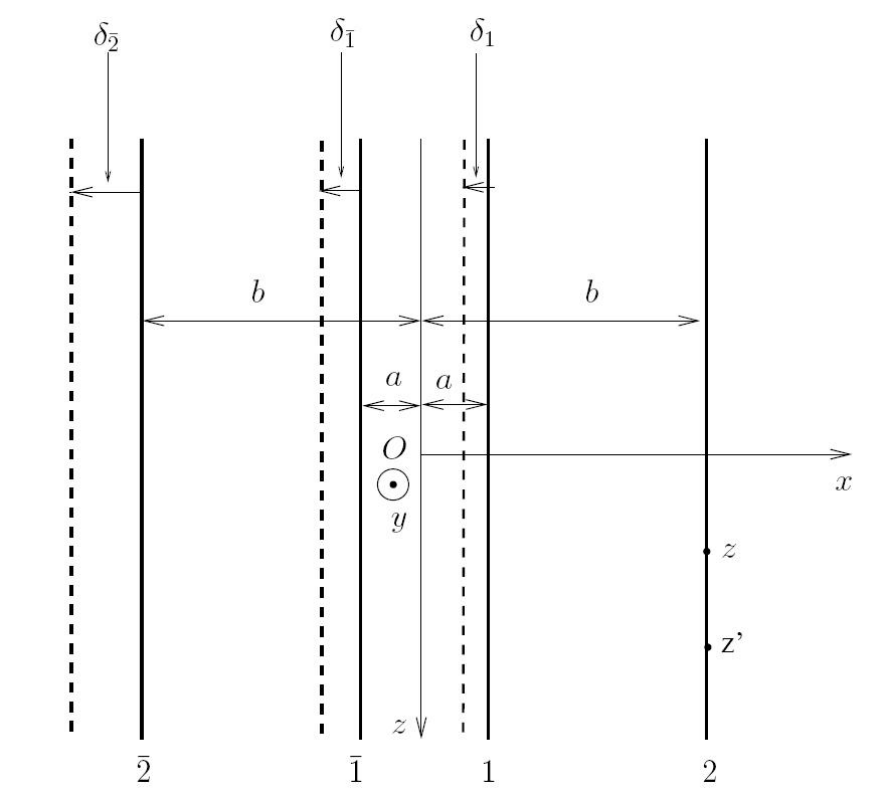

$$\begin{cases} \delta_1 &= (1-k)\varepsilon \\ \delta_2 &= 0 \\ \delta_{\bar{1}} &= -(1+k)\varepsilon \\ \delta_{\bar{2}} &= 2\varepsilon \end{cases}$$

$\longrightarrow$ Equation on $f_2(u)$:

$$\boxed{\frac{f_2'}{u} = -(1-k)g_{12} * g_{12} + (1+k)g_{1\bar{2}} * g_{1\bar{2}} - 2g_{2\bar{2}} * g_{2\bar{2}}}$$

Third perturbation: rotations of the fronts about 4 points aligned on a straight line.

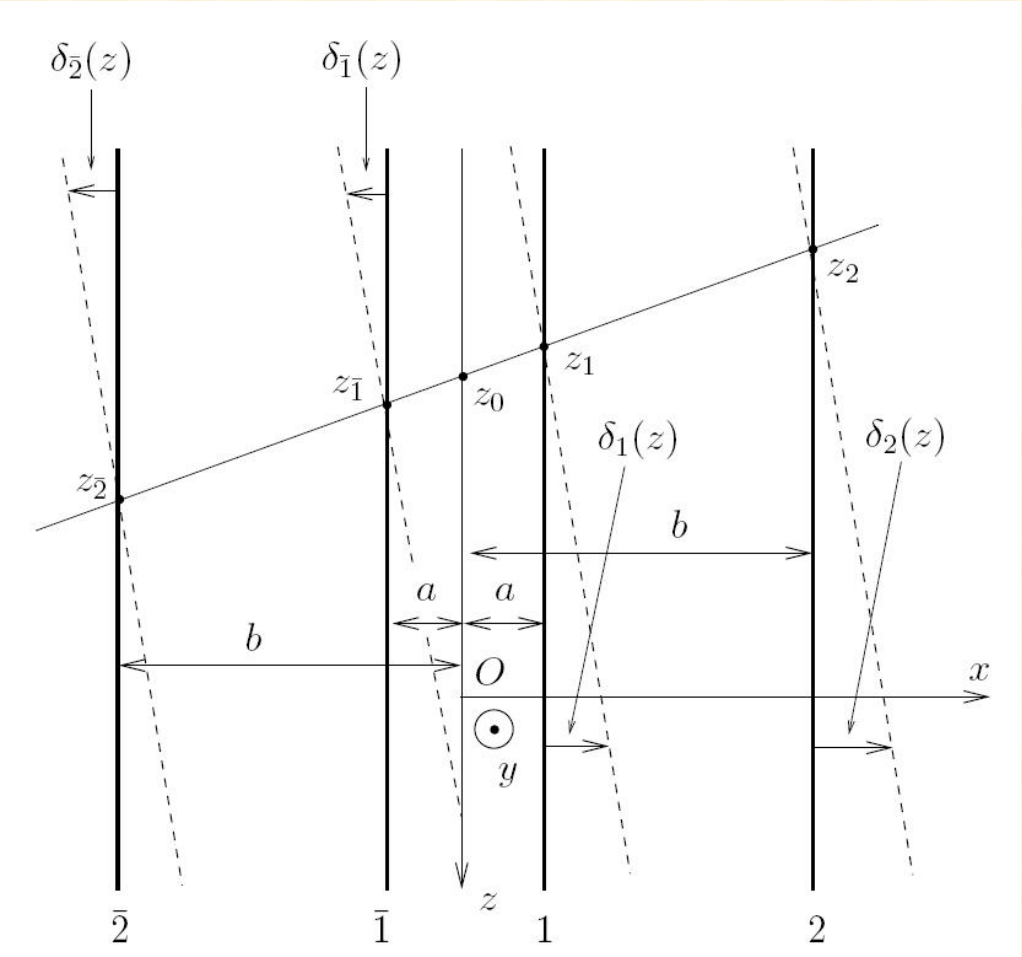

$$\begin{cases} z_1 = z_0 + k\zeta \\ z_2 = z_0 + \zeta \\ z_{\bar{1}} = z_0 - k\zeta \\ z_{\bar{2}} = z_0 - \zeta \end{cases}$$

$$\begin{cases} \delta_1(z) = -\varepsilon(z - z_1) \\ \delta_2(z) = \varepsilon(z - z_2) \\ \delta_{\bar{1}}(z) = \varepsilon(z - z_{\bar{1}}) \\ \delta_{\bar{2}}(z) = -\varepsilon(z - z_{\bar{2}}) \end{cases}$$

$\longrightarrow$ Equation on $g_{12}(u)$:

$$\frac{d}{du}\left[\left(1-k+\frac{u^2}{1-k}\right)g_{12}\right] = -PV\,\frac{f_1+f_2}{u} * g_{12} + (ug_{1\bar{1}}) * g_{1\bar{2}} - (ug_{1\bar{2}}) * g_{2\bar{2}}$$
$$+\frac{2k}{1-k}u(g_{1\bar{1}} * g_{1\bar{2}}) - \frac{1+k}{1-k}u(g_{1\bar{2}} * g_{2\bar{2}})$$

$\longrightarrow$ Equation on $g_{1\bar{1}}(u)$:

$$\frac{d}{du}\left[\left(2k+\frac{u^2}{2k}\right)g_{1\bar{1}}\right] = 2\,PV\,\frac{f_1}{u} * g_{1\bar{1}} - (ug_{12}) * g_{1\bar{2}} + (ug_{1\bar{2}}) * g_{12}$$
$$-\frac{u}{k}(g_{12} * g_{1\bar{2}})$$

$\longrightarrow$ Equation on $g_{1\bar{2}}(u)$:

$$\frac{d}{du}\left[\left(1+k+\frac{u^2}{1+k}\right)g_{1\bar{2}}\right] = PV\,\frac{f_1-f_2}{u} * g_{1\bar{2}} - (ug_{12}) * g_{2\bar{2}} - (ug_{1\bar{1}}) * g_{12}$$
$$-\frac{1-k}{1+k}u(g_{12} * g_{2\bar{2}}) + \frac{2k}{1+k}u(g_{1\bar{1}} * g_{12})$$

$\longrightarrow$ Equation on $g_{2\bar{2}}(u)$:

$$\frac{d}{du}\left[\left(2+\frac{u^2}{2}\right)g_{2\bar{2}}\right] = -2\,PV\,\frac{f_2}{u} * g_{2\bar{2}} + (ug_{12}) * g_{1\bar{2}} - (ug_{1\bar{2}}) * g_{12}$$
$$+ku(g_{12} * g_{1\bar{2}})$$

FTs of the preceding equations:

$$p\,\widehat{f_1} = -2(1-k)\widehat{g_{12}}\,\widehat{g_{12}}' + 4k\,\widehat{g_{1\bar{1}}}\,\widehat{g_{1\bar{1}}}' - 2(1+k)\widehat{g_{1\bar{2}}}\,\widehat{g_{1\bar{2}}}'$$

$$p\,\widehat{f_2} = -2(1-k)\widehat{g_{12}}\,\widehat{g_{12}}' + 2(1+k)\widehat{g_{1\bar{2}}}\,\widehat{g_{1\bar{2}}}' - 4\widehat{g_{2\bar{2}}}\,\widehat{g_{2\bar{2}}}'$$

$$p\left[(1-k)\widehat{g_{12}} - \frac{\widehat{g_{12}}''}{1-k}\right] = (\widehat{F_1}+\widehat{F_2})\widehat{g_{12}} + \frac{1+k}{1-k}\widehat{g_{1\bar{1}}}'\widehat{g_{1\bar{2}}} + \frac{2k}{1-k}\widehat{g_{1\bar{1}}}\widehat{g_{1\bar{2}}}' - \frac{2}{1-k}\widehat{g_{1\bar{2}}}'\widehat{g_{2\bar{2}}} - \frac{1+k}{1-k}\widehat{g_{1\bar{2}}}\widehat{g_{2\bar{2}}}'$$

$$p\left(2k\widehat{g_{1\bar{1}}} - \frac{\widehat{g_{1\bar{1}}}''}{2k}\right) = -2\widehat{F_1}\widehat{g_{1\bar{1}}} - \frac{1+k}{k}\widehat{g_{12}}'\widehat{g_{1\bar{2}}} - \frac{1-k}{k}\widehat{g_{12}}\widehat{g_{1\bar{2}}}'$$

$$p\left[(1+k)\widehat{g_{1\bar{2}}}-\frac{\widehat{g_{1\bar{2}}}''}{1+k}\right] = (\widehat{F}_2-\widehat{F}_1)\widehat{g_{1\bar{2}}}-\frac{2}{1+k}\widehat{g_{12}}'\widehat{g_{2\bar{2}}}-\frac{1-k}{1+k}\widehat{g_{12}}\widehat{g_{2\bar{2}}}'$$

$$-\frac{1-k}{1+k}\widehat{g_{1\bar{1}}}'\widehat{g_{12}}+\frac{2k}{1+k}\widehat{g_{1\bar{1}}}\widehat{g_{12}}'$$

$$p\left(2\widehat{g_{2\bar{2}}}-\frac{\widehat{g_{2\bar{2}}}''}{2}\right)=2\widehat{F}_2\widehat{g_{2\bar{2}}}+(1+k)\widehat{g_{12}}'\widehat{g_{1\bar{2}}}-(1-k)\widehat{g_{12}}\widehat{g_{1\bar{2}}}'$$

where $\widehat{F}_1(p)\equiv\int_0^p\widehat{f}_1(p')dp'$; $\widehat{F}_2(p)\equiv\int_0^p\widehat{f}_2(p')dp'$.

These equations are integrated numerically using the known values of the functions $\widehat{F}_\alpha$ and $\widehat{g_{\alpha\beta}}$ at $p=0$.

Results:

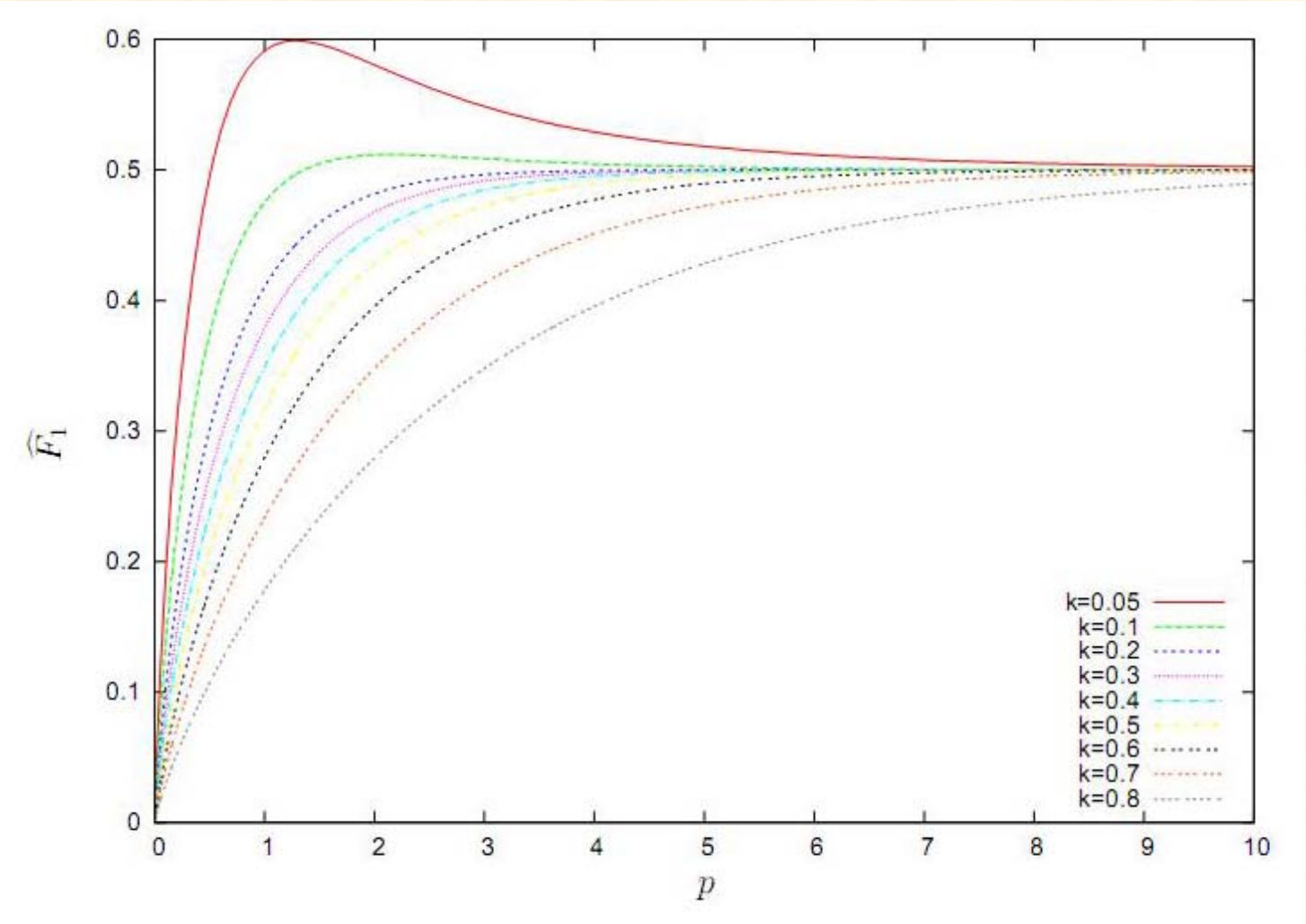
0.6
0.5
0.4
0.3
0.2
0.1
0
$\langle F_1 \rangle$
0
1
2
3
4
5
6
7
8
9
10
p
k=0.05
k=0.1
k=0.2
k=0.3
k=0.4
k=0.5
k=0.6
k=0.7
k=0.8

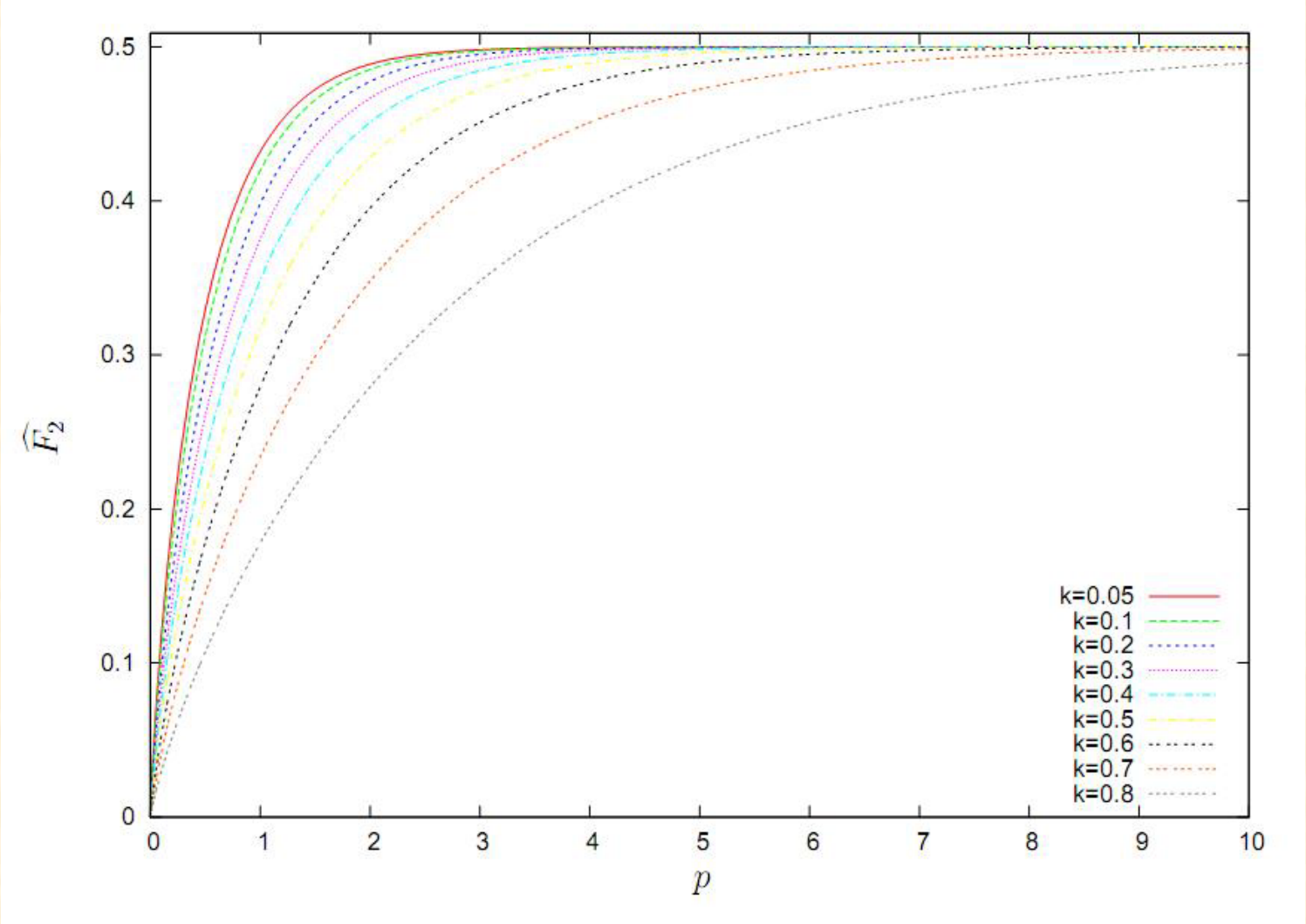
0.5
0.4
0.3
0.2
0.1
0
$\widehat{F}_2$
0
1
2
3
4
5
6
7
8
9
10
p
k=0.05
k=0.1
k=0.2
k=0.3
k=0.4
k=0.5
k=0.6
k=0.7
k=0.8

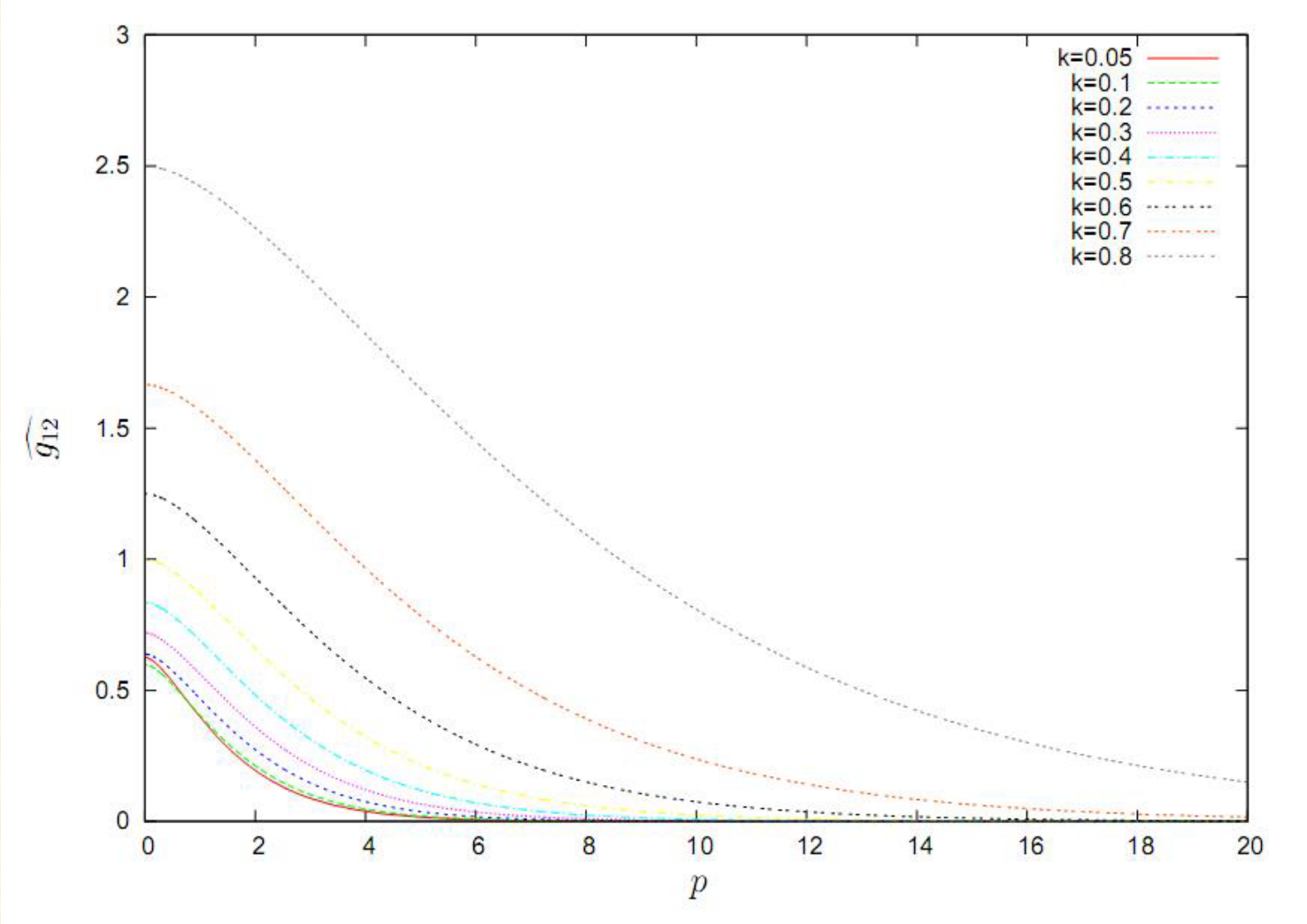
k=0.05
k=0.1
k=0.2
k=0.3
k=0.4
k=0.5
k=0.6
k=0.7
k=0.8
$\widetilde{g_{12}}$
p
0
0.5
1
1.5
2
2.5
3
0
2
4
6
8
10
12
14
16
18
20

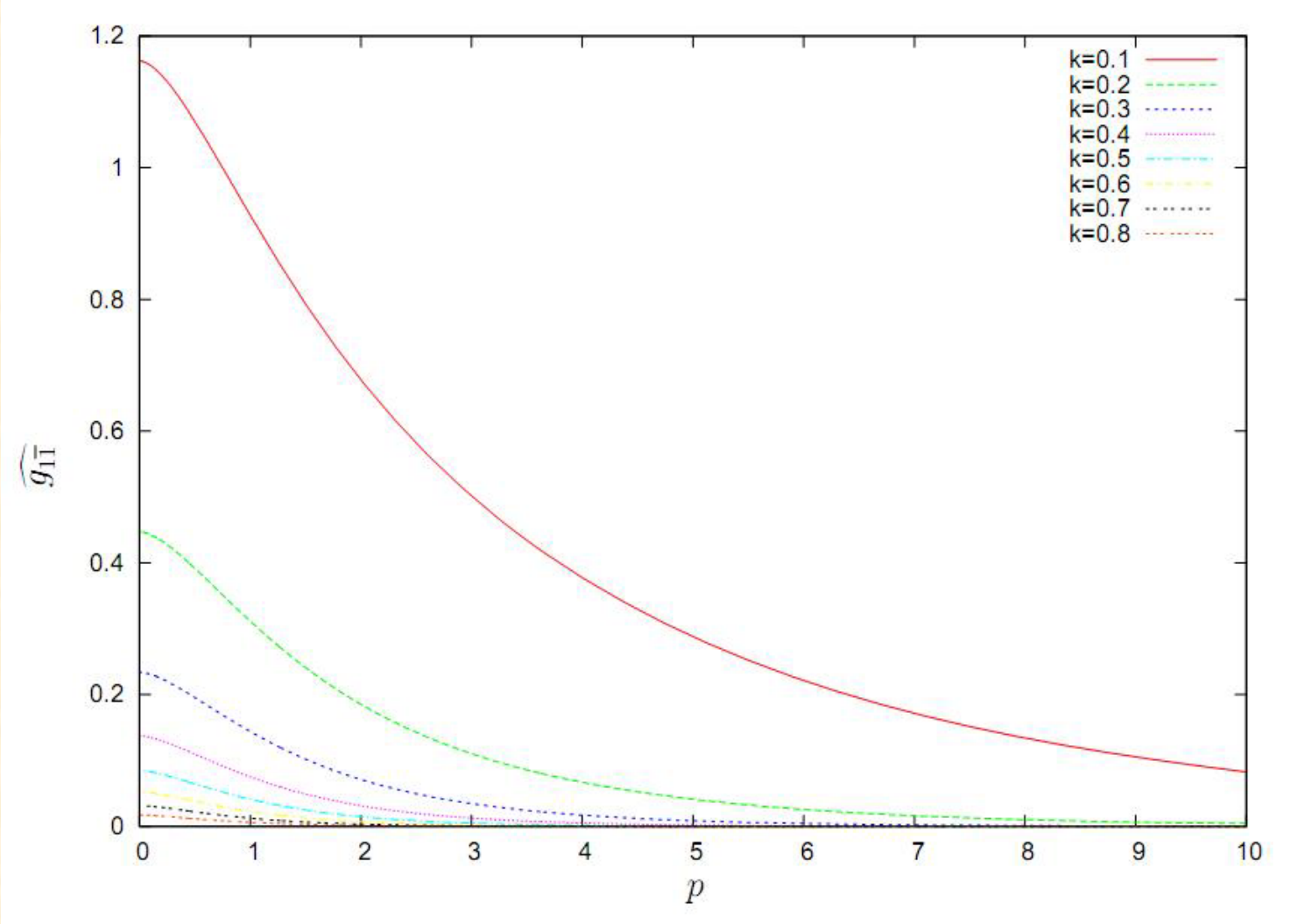
1.2
1
0.8
0.6
0.4
0.2
0
0
1
2
3
4
5
6
7
8
9
10
p
$\widetilde{g_{1\bar{1}}}$
k=0.1
k=0.2
k=0.3
k=0.4
k=0.5
k=0.6
k=0.7
k=0.8

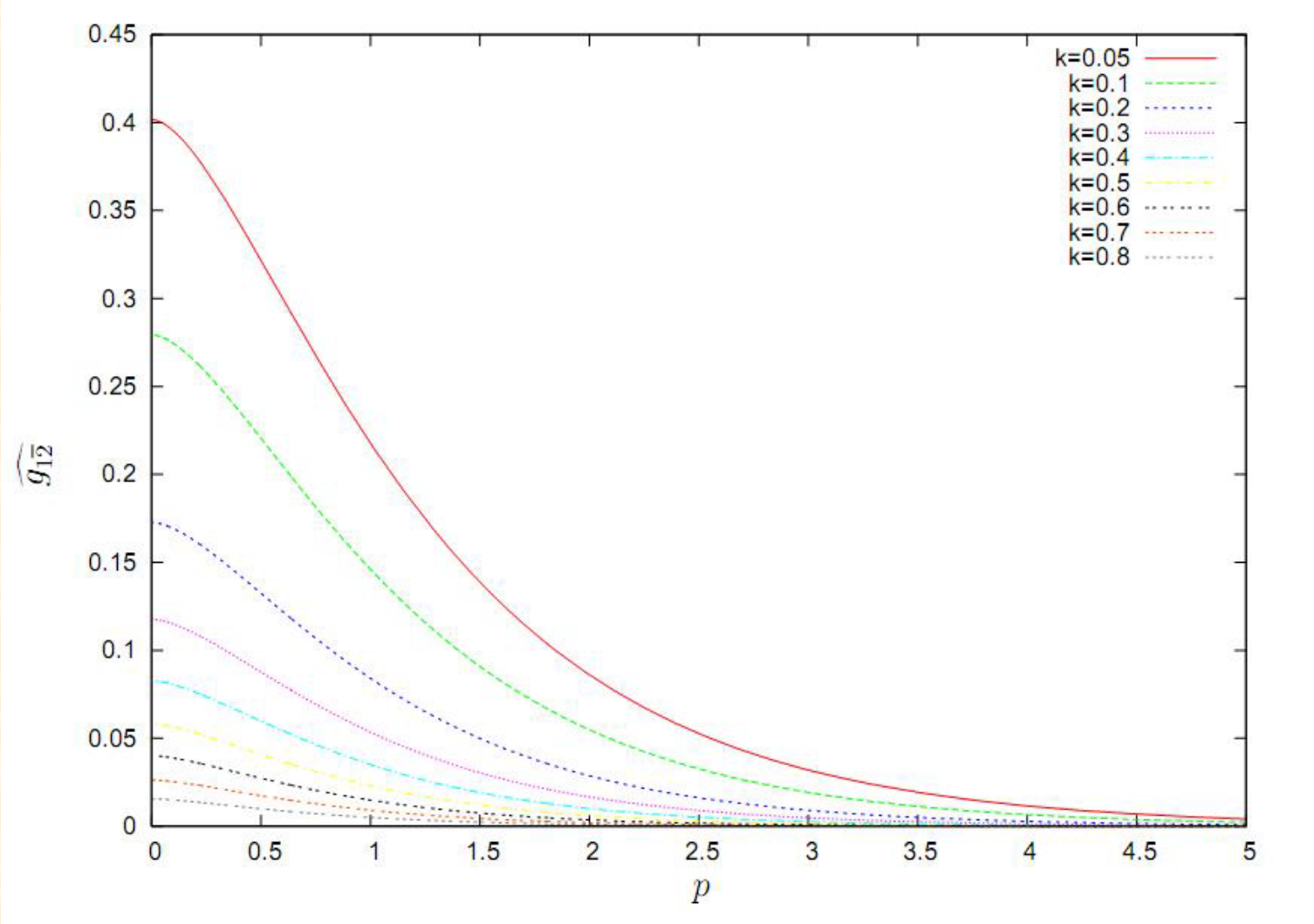
0.45
0.4
0.35
0.3
0.25
0.2
0.15
0.1
0.05
0
0
0.5
1
1.5
2
2.5
3
3.5
4
4.5
5
p
$\widetilde{g_{1\overline{2}}}$
k=0.05
k=0.1
k=0.2
k=0.3
k=0.4
k=0.5
k=0.6
k=0.7
k=0.8

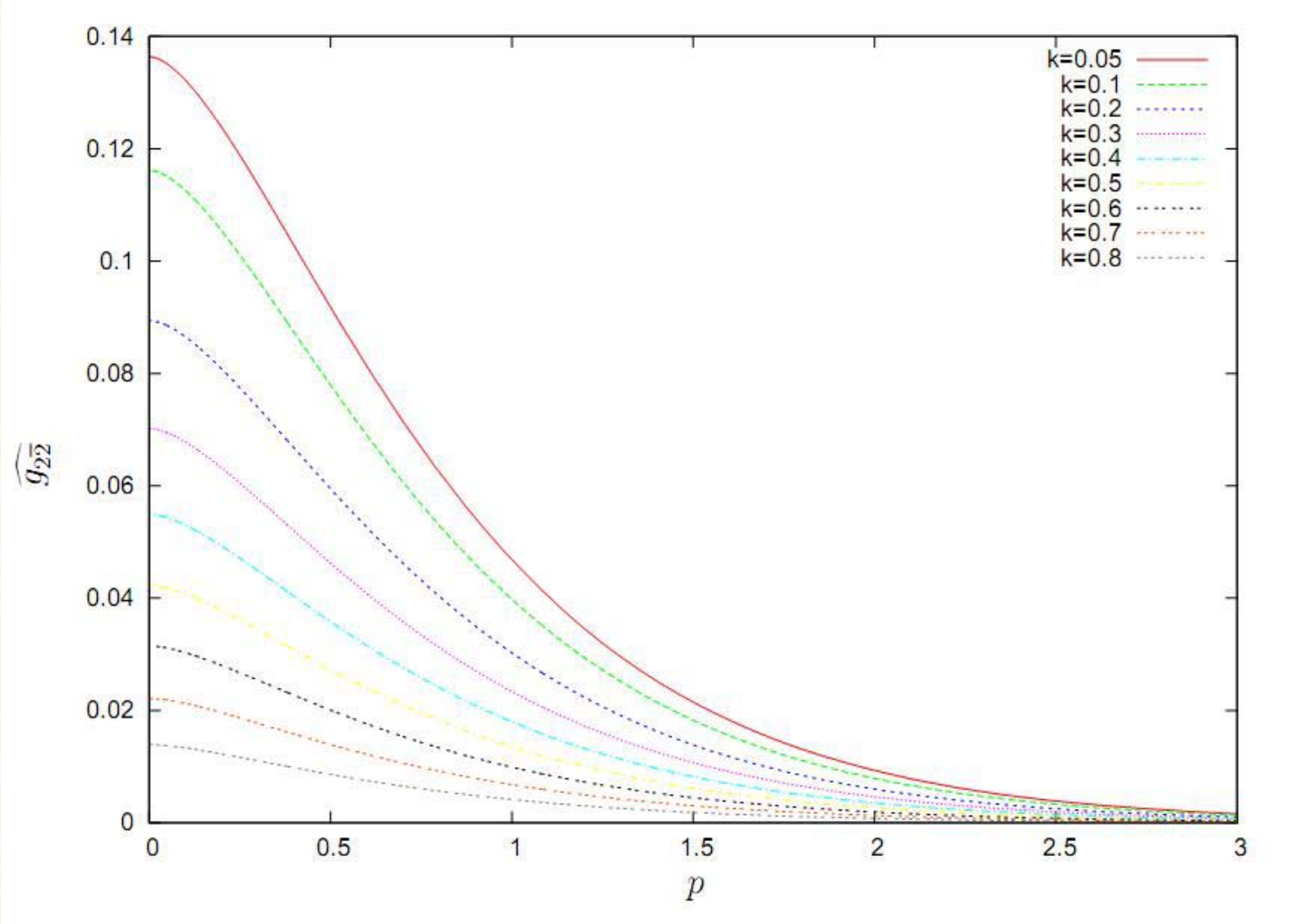
0.14
0.12
0.1
0.08
0.06
0.04
0.02
0
0
0.5
1
1.5
2
2.5
3
p
$\widetilde{g_{2\bar{2}}}$
k=0.05
k=0.1
k=0.2
k=0.3
k=0.4
k=0.5
k=0.6
k=0.7
k=0.8

5. CASE OF A LARGE DISTANCE BETWEEN THE OUTER FRONTS

The case where $b \to +\infty$ or equivalently $k \to 0$ raises a problem of non-singular perturbation in Fourier's space.

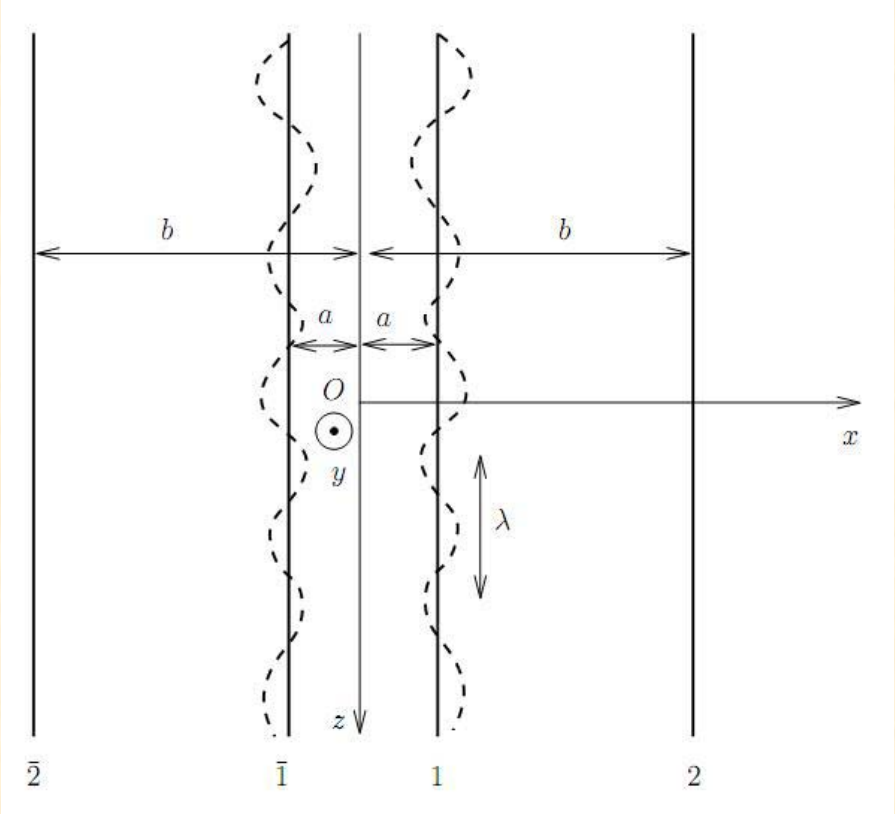

Small wavelength, $a \sim \lambda \ll b$: the influence of the outer fronts upon the distribution of the SIFs on the inner fronts disappears.

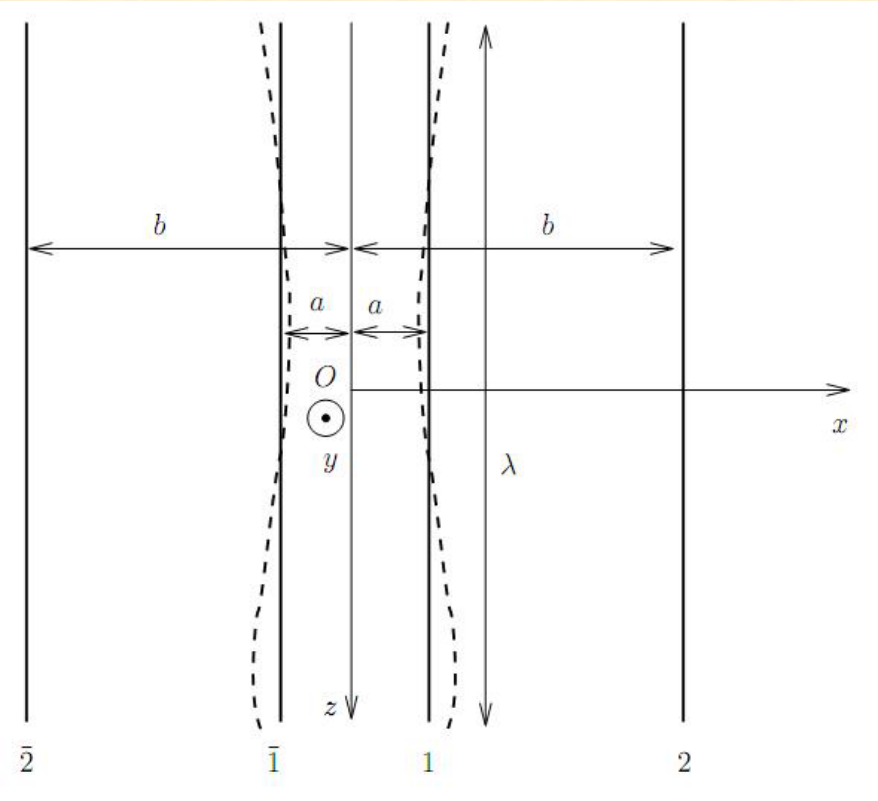

Large wavelength, $a \ll \lambda \sim b$: the influence of the outer fronts upon the distribution of the SIFs on the inner fronts does not disappear.

$\longrightarrow$ The behavior of the functions must be different for small p and large p : existence of a boundary layer. The problem may be solved though matched asymptotic expansions.

Changes of variables and functions:

* In the limit $b \to +\infty$, one must use a instead of b as a reference length, i.e. use the reduced variables

$$v \equiv \frac{z}{a} \quad ; \quad q \equiv \frac{2\pi a}{\lambda} = kp$$

instead of

$$u \equiv \frac{z}{b} \quad ; \quad p \equiv \frac{2\pi b}{\lambda}$$

* One must also use the functions

$$\widehat{F}(q) \equiv \widehat{F}_1(p) \quad ; \quad \widehat{g}(q) \equiv k\,\widehat{g_{1\bar{1}}}(p)$$

(change of functions based on their orders of magnitude for $k \to 0$).

The ODEs then reduce to a system on $\widehat{F}$ and $\widehat{g}$ only:

$$\begin{cases} q\widehat{F}'(q) & = & 4\widehat{g}(q)\widehat{g}'(q) \\ q\left[\widehat{g}(q)-\dfrac{\widehat{g}''(q)}{4}\right] & = & -\widehat{F}(q)\widehat{g}(q) \end{cases}$$

which may itself be reduced to a single ODE on $\widehat{g}$:

$$\boxed{\widehat{g}''(q)=4\widehat{g}(q)\left[1+\frac{1}{q}\sqrt{\frac{1}{4}-4\widehat{g}^{2}(q)+\widehat{g}'^{2}(q)}\right]}$$

Results:

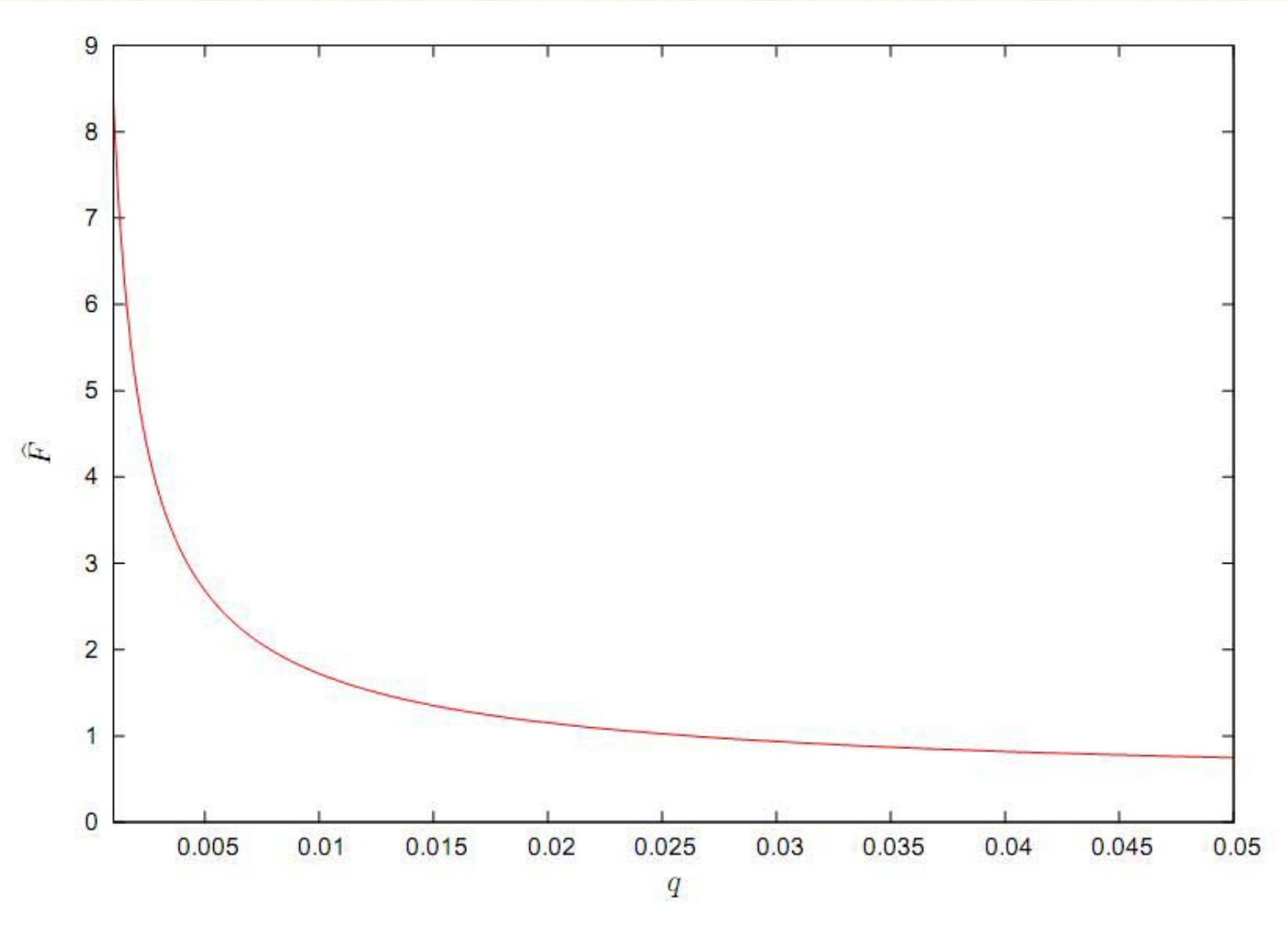
9
8
7
6
5
4
3
2
1
0
$\widehat{F}$
0.005
0.01
0.015
0.02
0.025
0.03
0.035
0.04
0.045
0.05
q

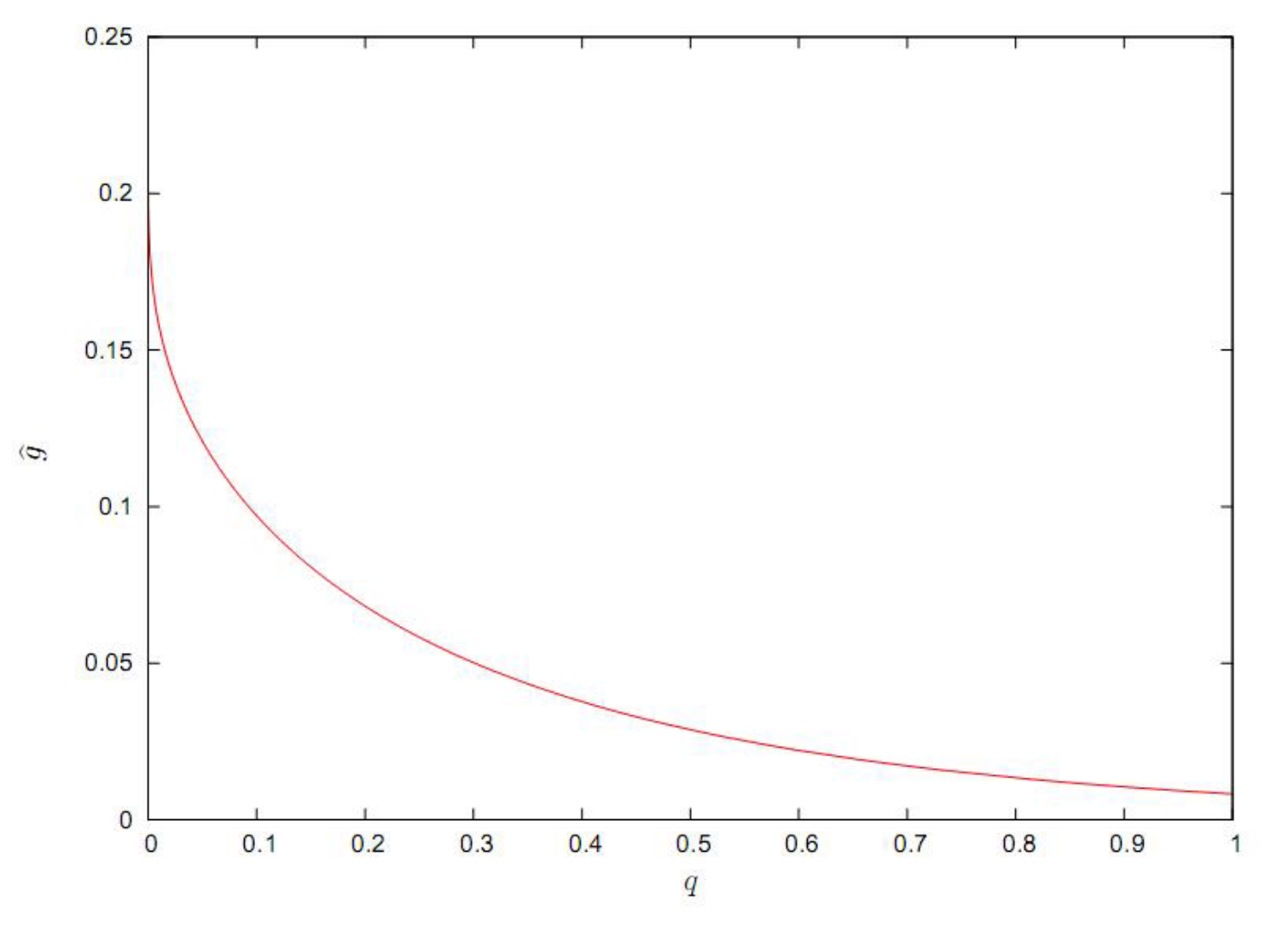
0.25
0.2
0.15
0.1
0.05
0
$\hat{q}$
0
0.1
0.2
0.3
0.4
0.5
0.6
0.7
0.8
0.9
1
q

Perturbation of the SIFs on the inner fronts in the limit $b \to +\infty$ (for $\lambda \ll b$):

$$\boxed{\begin{aligned}\frac{\delta K^{\pm}(z)}{K} &= \frac{\delta^{\pm}(z)}{4a} + PV\int_{-\infty}^{+\infty} f\left(\frac{z-z'}{a}\right)\frac{\delta^{\pm}(z')-\delta^{\pm}(z)}{(z-z')^2}dz' \\ &+ \int_{-\infty}^{+\infty} g\left(\frac{z-z'}{a}\right)\frac{\delta^{\mp}(z')}{a^2}dz'\end{aligned}}$$

where

$$\begin{cases} K \equiv K_1 \equiv K_{\bar{1}} \\ \delta K^{+}(z) \equiv \delta K_1(z) \quad ; \quad \delta K^{-}(z) \equiv \delta K_{\bar{1}}(z) \\ \delta^{+}(z) \equiv \delta_1(z) \quad ; \quad \delta^{-}(z) \equiv \delta_{\bar{1}}(z) \end{cases}$$

6. EVOLUTION OF THE FRONTS DURING CRACK PROPAGATION

Paris-type propagation law:

$$\boxed{\frac{\partial}{\partial t}\left[-a(t)+\delta^{\pm}(z,t)\right]=\overline{C}\left[1+\delta c(z,x=\pm a(t))\right]\left[K(t)+\delta K^{\pm}(z,t)\right]^{N}}$$

$\overline{C}$: average value of the Paris constant;

$\delta c(z,x) \ll 1$: normalized fluctuation of the Paris constant;

N : Paris exponent.

Evolution of Fourier components of the perturbations of the fronts:

First-order expansion of the propagation law $\longrightarrow$

$$\begin{cases} -\dfrac{da}{dt}(t) & = & \overline{C}\left[K(t)\right]^N \\ \dfrac{\partial \delta^{\pm}}{\partial t}(z,t) & = & N\overline{C}\left[K(t)\right]^{N-1}\delta K^{\pm}(z,t) + \overline{C}\left[K(t)\right]^N \delta c(z, x = \pm a(t)) \end{cases}$$

Elimination of dt $\longrightarrow$

$$-\frac{\partial \delta^{\pm}}{\partial a}(z,a) = N\frac{\delta K^{\pm}(z,a)}{K(a)} + \delta c(z, \pm a)$$

where a is used instead of t as « kinematic time ».

FT of this equation:

$$-\frac{\partial \widehat{\delta^{\pm}}}{\partial a}(\zeta, a) = \frac{N}{a}\left[\overline{f}(\zeta a)\widehat{\delta^{\pm}}(\zeta, a) + \hat{g}(\zeta a)\widehat{\delta^{\mp}}(\zeta, a)\right] + \widehat{\delta c}(z, \pm a)$$

where

$$\overline{f}(q) \equiv \frac{1}{4} - \int_0^q \widehat{F}(q')dq'$$

The function $\overline{f}(q)$ (in blue, with $\hat{g}(q)$ in red) :

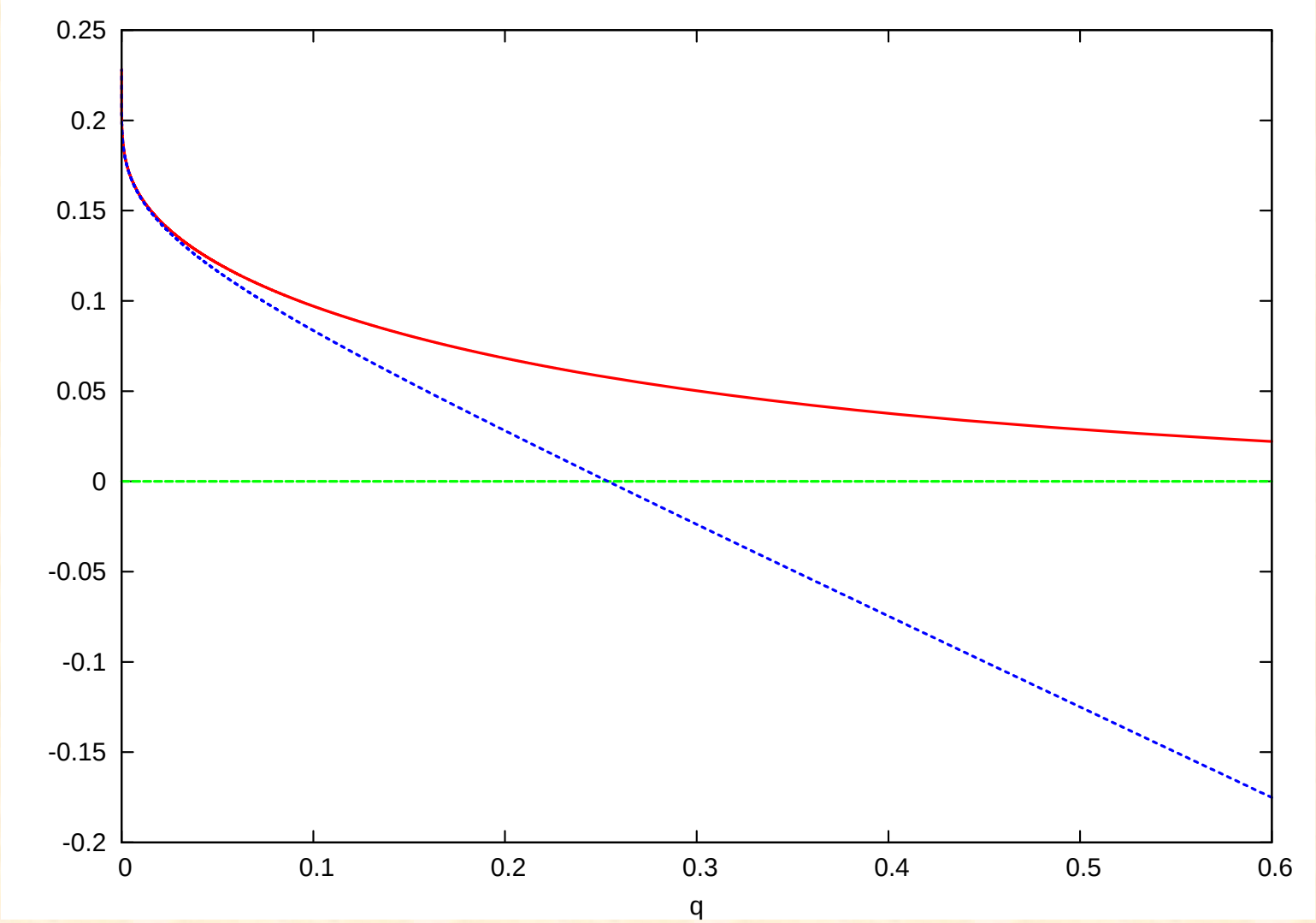

Integration for initially straight fronts ($\hat{\delta}^{\pm}(\zeta, a_0) = 0$):

$$\begin{cases} (\widehat{\delta^+} + \widehat{\delta^-})(\zeta, a) & = & \int_a^{a_0} [\psi(\zeta a, \zeta a_1)]^N \left[\widehat{\delta c}(\zeta, a_1) + \widehat{\delta c}(\zeta, -a_1) \right] da_1 \\ (\widehat{\delta^+} - \widehat{\delta^-})(\zeta, a) & = & \int_a^{a_0} [\chi(\zeta a, \zeta a_1)]^N \left[\widehat{\delta c}(\zeta, a_1) - \widehat{\delta c}(\zeta, -a_1) \right] da_1 \end{cases}$$

where

$$\begin{cases} \psi(q_1, q_2) & \equiv & \exp\left[\int_{q_1}^{q_2} (\overline{f} + \hat{g})(q) \frac{dq}{q} \right] \\ \chi(q_1, q_2) & \equiv & \exp\left[\int_{q_1}^{q_2} (\overline{f} - \hat{g})(q) \frac{dq}{q} \right] \end{cases}$$

Instability in the symmetric case:

Assume that

$$\delta c(z,x) \equiv 0 \quad \text{and} \quad \delta^{+}(z,t) = \delta^{-}(z,t) \equiv \delta(z,t)$$

(homogeneous fracture properties, symmetric fronts).

Then

$$-\frac{\partial \hat{\delta}}{\partial a}(\zeta, a) = \frac{N}{a}(\overline{f} + \hat{g})(\zeta a)\hat{\delta}(\zeta, a)$$

Numerical study of the function $\overline{f} + \hat{g}$ $\longrightarrow$

$$(\overline{f} + \hat{g})(q) \quad \begin{cases} > 0 & \text{for} \quad q < q_0 \\ < 0 & \text{for} \quad q > q_0 \end{cases} \quad \text{where} \quad q_0 \approx 0.341 .$$

Consequences:

* If $\lambda < \lambda_c \equiv 2\pi a / q_0$, the undulations of the fronts tend to decrease in time (stability);

* If $\lambda > \lambda_c \equiv 2\pi a / q_0$, the undulations of the fronts tend to increase in time (instability);

* Since λ_c continuously decreases, more and more wavelengths, in time, will give rise to instability.

7. STATISTICS OF THE DEFORMATION OF THE FRONTS

Hypotheses:

* Symmetric case:

$$\delta c(z,a(t)) = \delta c(z,-a(t)) \quad , \quad \delta^{+}(z,t) = \delta^{-}(z,t) \equiv \delta(z,t)$$

* Paris's constant varies randomly in the material.

* Its distribution is statistically isotropic and homogeneous within the crack plane.

* One considers an ensemble of statistical realizations of the heterogeneous material and defines the functions :

$$E\left[\delta c(z_1, x_1)\delta c(z_2, x_2)\right] \equiv C(z_1 - z_2, x_1 - x_2)$$

(autocorrelation function of the fluctuation of the Paris constant);

$$E\left[\delta(z_1, a)\delta(z_2, a)\right] \equiv \Delta(z_1 - z_2, a)$$

(autocorrelation function of the perturbation of the fronts).

Asymptotic expression of the power spectrum of the perturbation of the fronts (FT of Δ):

d : « correlation length » of the fluctuations of the Paris constant (width of the function C)

The following expression holds for $d \ll a \ll a_0 \ll \lambda$:

$$\boxed{\hat{\Delta}(\zeta, a) \approx \frac{\widetilde{C}(0,0)}{N+1} a_0 \left(\frac{a_0}{a}\right)^N \left[\frac{\ln(|\zeta a_0|)}{\ln(|\zeta a|)}\right]^{2N}}$$

where $\widetilde{C}$ is the double (z, x) -FT of C .

Consequences:

* The amplitude of the perturbation of the fronts (connected to the magnitude of $\hat{\Delta}(\zeta, a)$) increases indefinitely during the coalescence of the cracks.

* The correlation length of the perturbation of the fronts (connected to the width of $\hat{\Delta}(\zeta, a)$) is of the order of

$$\frac{2\pi}{\int_0^1 |\ln x|^{2N}\, dx} a_0 \left(\ln \frac{a_0}{a} \right)^{2N}$$

and thus also increases indefinitely, though slowly.

Both effects are related to the instability evidenced for $\lambda > \lambda_c$:

* The magnitude of $\delta(z,t)$ increases because its Fourier components having $\lambda > \lambda_c$ (the number of which grows) increase.

* Its correlation length increases because the instability favors development of Fourier components of large λ .

6. CONCLUSION

* The problem of the slight in-plane perturbation of a system of two parallel coplanar identical slit-cracks has been solved by an original method based on Bueckner-Rice's theory, which avoids solving the full 3D elasticity problem implied.

* The case where the outer fronts are very far apart raises a problem of singular perturbation in Fourier's space, which has been solved through matched asymptotic expansions.

* Assuming a Paris-type crack propagation law, the evolution in time of the in-plane deformation of the inner fronts during coalescence of the cracks has been obtained analytically.

* For propagation in a heterogeneous material with random Paris constant, a statistical study has evidenced

1) an unlimited increase of the magnitude of the in-plane deformation of the inner fronts;

2) a slow increase of its distance of correlation.